SECTION LAN
LAN SYSTEM

CONTENTS

CAN

PRECAUTIONS 3
Precautions for Supplemental Restraint System (SRS) “AIR BAG” and “SEAT BELT PRE-TENSIONER” 3
Precautions for Trouble Diagnosis 3
CAN SYSTEM 3
Precautions for Harness Repair 3
CAN SYSTEM 3
TROUBLE DIAGNOSES WORK FLOW 4
When Displaying CAN Communication System Errors 4
WHEN A MALFUNCTION IS DETECTED BY CAN COMMUNICATION SYSTEM 4
WHEN A MALFUNCTION IS DETECTED EXCEPT CAN COMMUNICATION SYSTEM 4
TROUBLE DIAGNOSIS FLOW CHART 5
Diagnosis Procedure 6
SELECTING CAN SYSTEM TYPE (HOW TO USE SPECIFICATION TABLE) 6
ACQUISITION OF DATA BY CONSULT-II 7
HOW TO USE CHECK SHEET TABLE 8
CAN Diagnostic Support Monitor 13
DESCRIPTION OF “CAN DIAG SUPPORT MNTR” SCREEN FOR ECM 13
DESCRIPTION OF “CAN DIAG SUPPORT MNTR” SCREEN FOR TCM 14
DESCRIPTION OF “CAN DIAG SUPPORT MNTR” SCREEN FOR ABS ACTUATOR AND ELECTRIC UNIT (CONTROL UNIT) 14
DESCRIPTION OF “CAN DIAG SUPPORT MNTR” SCREEN FOR VDC/TCS/ABS CONTROL UNIT 15
DESCRIPTION OF “CAN DIAG SUPPORT MNTR” SCREEN FOR AWD CONTROL UNIT 15
CAN COMMUNICATION 16
System Description 16
Component Parts and Harness Connector Location 16
Schematic 17
Wiring Diagram — CAN — 18
CAN Communication Unit 21
TYPE 1 21
TYPE 2 22
TYPE 3 23
TYPE 4 24
TYPE 5 25
CAN SYSTEM (TYPE 1) 27
Component Parts and Harness Connector Location 27
Schematic 27
Wiring Diagram — CAN — 27
Check Sheet 28
CHECK SHEET RESULTS (EXAMPLE) 29
CAN SYSTEM (TYPE 2) 34
Component Parts and Harness Connector Location 34
Schematic 34
Wiring Diagram — CAN — 34
Check Sheet 35
CHECK SHEET RESULTS (EXAMPLE) 36
CAN SYSTEM (TYPE 3) 41
Component Parts and Harness Connector Location 41
Schematic 41
Wiring Diagram — CAN — 41
Check Sheet 42
CHECK SHEET RESULTS (EXAMPLE) 43
CAN SYSTEM (TYPE 4) 50
Component Parts and Harness Connector Location 50
Schematic 50
Wiring Diagram — CAN — 50
Check Sheet 51
CHECK SHEET RESULTS (EXAMPLE) 52
CAN SYSTEM (TYPE 5) 58
Component Parts and Harness Connector Location 58
Schematic 58
Wiring Diagram — CAN — 58
Check Sheet 59
CHECK SHEET RESULTS (EXAMPLE) 60
TROUBLE DIAGNOSIS FOR SYSTEM 68
Inspection Between TCM and ABS Actuator and Electric Unit (Control Unit) Circuit for 2WD Model 68

Inspection Between TCM and ABS Actuator and Electric Unit (Control Unit) Circuit for AWD Model ... 69
Inspection Between TCM and VDC/TCS/ABS Control Unit Circuit ... 70
Inspection Between ABS Actuator and Electric Unit (Control Unit) and AWD Control Unit Circuit ... 72
Inspection Between VDC/TCS/ABS Control Unit and AWD Control Unit Circuit ... 73
ECM Circuit Inspection for A/T Model ... 74
ECM Circuit Inspection for M/T Model ... 74
TCM Circuit Inspection ... 75
ABS Actuator and Electric Unit (Control Unit) Circuit Inspection ... 75
VDC/TCS/ABS Control Unit Circuit Inspection ... 76
Steering Angle Sensor Circuit Inspection ... 76
AWD Control Unit Circuit Inspection ... 77
Combination Meter Circuit Inspection for 2WD Model ... 77
Combination Meter Circuit Inspection for AWD Model ... 78
CAN Communication Circuit Inspection ... 79

PRECAUTIONS

PFP:00001

Precautions for Supplemental Restraint System (SRS) “AIR BAG” and “SEAT BELT PRE-TENSIONER”

AKS00BCH

The Supplemental Restraint System such as “AIR BAG” and “SEAT BELT PRE-TENSIONER”, used along with a front seat belt, helps to reduce the risk or severity of injury to the driver and front passenger for certain types of collision. Information necessary to service the system safely is included in the SRS and SB section of this Service Manual.

WARNING:

- **To avoid rendering the SRS inoperative, which could increase the risk of personal injury or death in the event of a collision which would result in air bag inflation, all maintenance must be performed by an authorized NISSAN/INFINITI dealer.**
- **Improper maintenance, including incorrect removal and installation of the SRS, can lead to personal injury caused by unintentional activation of the system. For removal of Spiral Cable and Air Bag Module, see the SRS section.**
- **Do not use electrical test equipment on any circuit related to the SRS unless instructed to in this Service Manual. SRS wiring harnesses can be identified by yellow and/or orange harnesses or harness connectors.**

Precautions for Trouble Diagnosis

AKS00BCI

CAN SYSTEM

- Do not apply voltage of 7.0 V or higher to the measurement terminals.
- Use the tester with its open terminal voltage being 7.0 V or less.
- Be sure to turn ignition switch off and disconnect battery cable at negative terminal before checking the circuit.

Precautions for Harness Repair

AKS00BCJ

CAN SYSTEM

- Solder the repaired parts, and wrap with tape. [Frays of twisted line must be within 110 mm (4.33 in).]

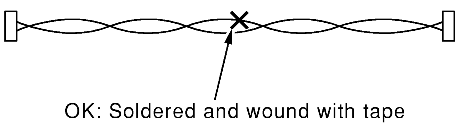

PKIA0306E

- Do not perform bypass wire connections for the repair parts. (The spliced wire will become separated and the characteristics of twisted line will be lost.)

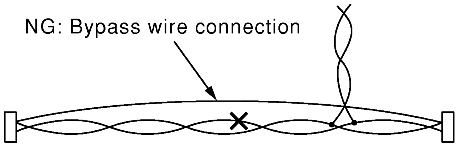

PKIA0307E

TROUBLE DIAGNOSES WORK FLOW

PFP:00004

When Displaying CAN Communication System Errors

AKS00BQF

WHEN A MALFUNCTION IS DETECTED BY CAN COMMUNICATION SYSTEM

- CAN communication line is open. (CAN H, CAN L, or both)
- CAN communication line is shorted. (Ground, between CAN lines, or other harnesses)
- The areas related to CAN communication of unit is malfunctioning.

WHEN A MALFUNCTION IS DETECTED EXCEPT CAN COMMUNICATION SYSTEM

- Removal and installation of parts: When the units that perform CAN communication or the sensors related to CAN communication are removed and installed, malfunction may be detected (or DTC other than CAN communication may be detected).
- Fuse blown out (removed): CAN communication of the unit may be stopped at such time.
- Low voltage: If the voltage decreases because of battery discharge when IGN is ON, malfunction may be detected by self-diagnosis according to the units.

TROUBLE DIAGNOSIS FLOW CHART

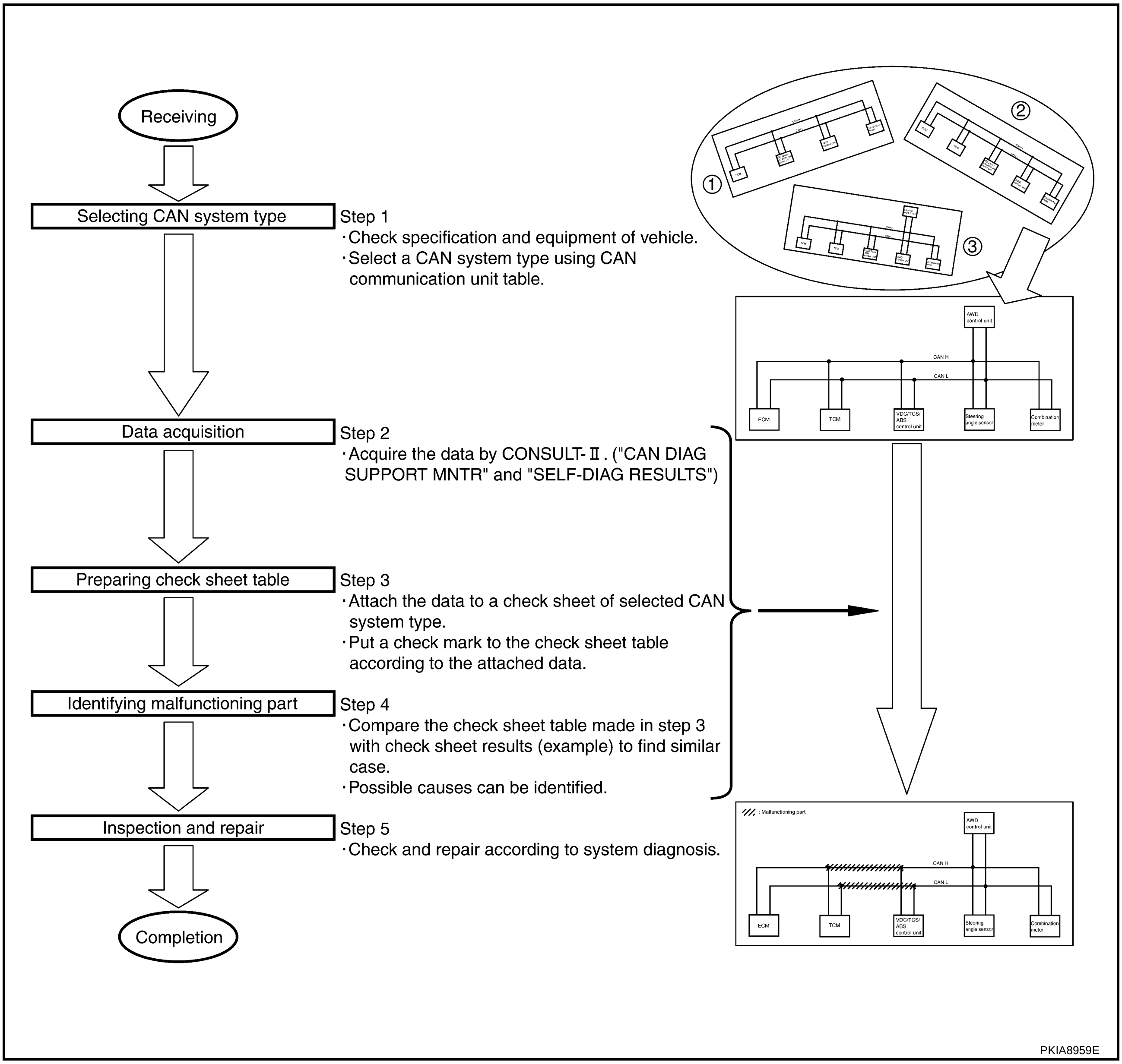

PKIA8959E

- Step 1: Refer to LAN-6, "SELECTING CAN SYSTEM TYPE (HOW TO USE SPECIFICATION TABLE)" .
- Step 2: Refer to LAN-7, "ACQUISITION OF DATA BY CONSULT-II" .
- Step 3: Refer to LAN-8, "HOW TO USE CHECK SHEET TABLE" .
- Step 4: Refer to LAN-9, "Example of Filling in Check Sheet When Initial Conditions Are Reproduced" .
- Step 5: Refer to LAN-68, "TROUBLE DIAGNOSIS FOR SYSTEM" .

Diagnosis Procedure

AKS00BQG

SELECTING CAN SYSTEM TYPE (HOW TO USE SPECIFICATION TABLE)

Determine CAN system type from the equipment of the vehicle to select applicable check sheet.

(Example) Wagon/AWD/QR25DE/AT/VDC

CAN Communication Unit

Go to CAN system, when selecting your CAN system type from the following table.

Body type	Wagon				
Axle	2WD	AWD			
Engine	QR25DE				
Transmission	A/T	M/T	A/T	M/T	A/T
Brake control	ABS			VDC	
CAN system type	1	2	3	4	5
CAN system trouble diagnosis	XX-XX	XX-XX	XX-XX	XX-XX	XX-XX

Check basic specification of the vehicle.

Which number is selected when sequentially selecting from the top of the specification table?
The number is "CAN system type" of the applicable vehicle.

In the case of this example:
It corresponds to type 5.

PKIA8960E

ACQUISITION OF DATA BY CONSULT-II

Attach the data acquired by CONSULT-II on the check sheet determined according to CAN system type.

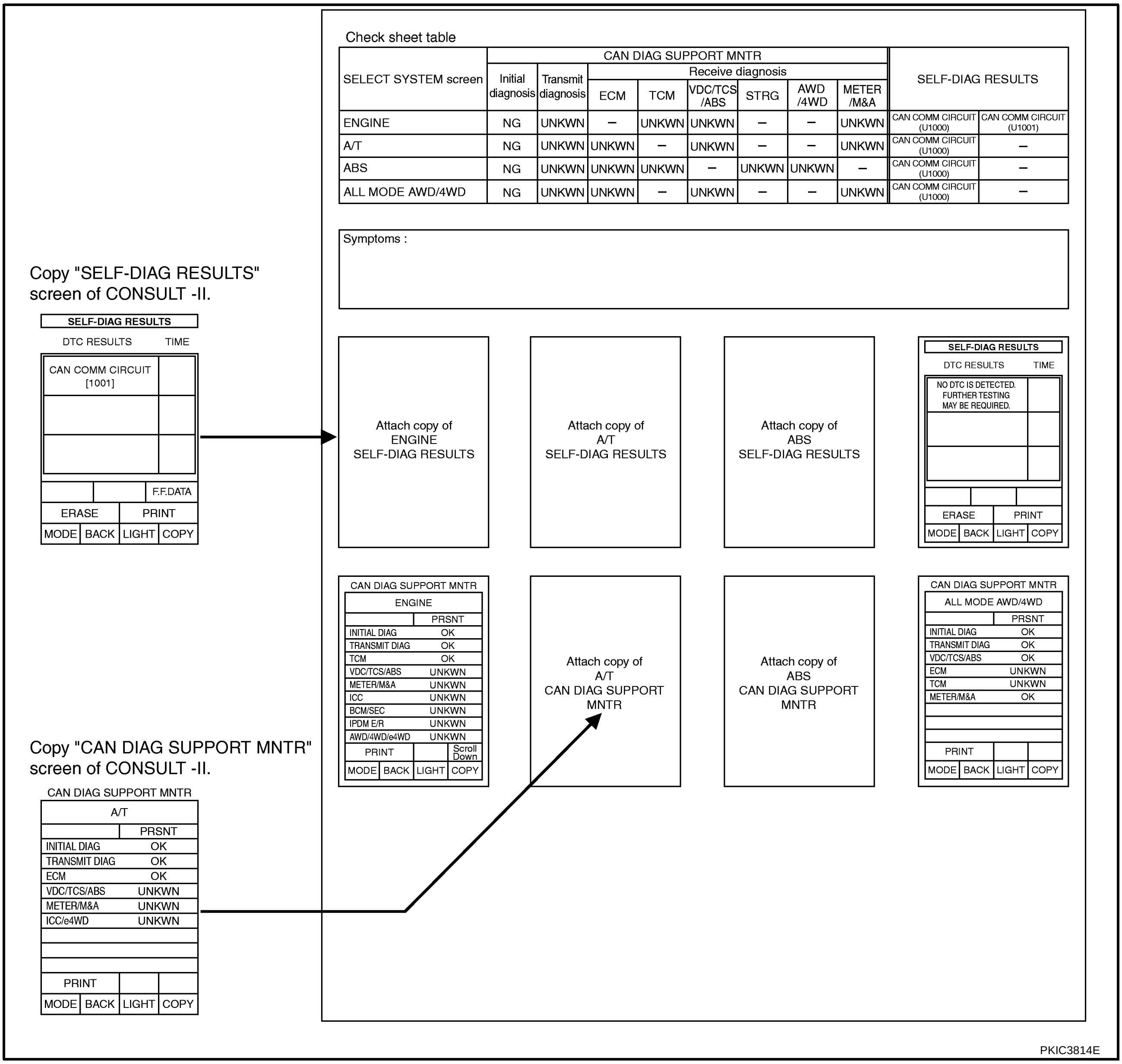

Check sheet table

SELECT SYSTEM screen	CAN DIAG SUPPORT MNTR: Initial diagnosis	Transmit diagnosis	Receive diagnosis: ECM	TCM	VDC/TCS/ABS	STRG	AWD/4WD	METER/M&A	SELF-DIAG RESULTS	
ENGINE	NG	UNKWN	–	UNKWN	UNKWN	–	–	UNKWN	CAN COMM CIRCUIT (U1000)	CAN COMM CIRCUIT (U1001)
A/T	NG	UNKWN	UNKWN	–	UNKWN	–	–	UNKWN	CAN COMM CIRCUIT (U1000)	–
ABS	NG	UNKWN	UNKWN	UNKWN	–	UNKWN	UNKWN	–	CAN COMM CIRCUIT (U1000)	–
ALL MODE AWD/4WD	NG	UNKWN	UNKWN	–	UNKWN	–	–	UNKWN	CAN COMM CIRCUIT (U1000)	–

HOW TO USE CHECK SHEET TABLE

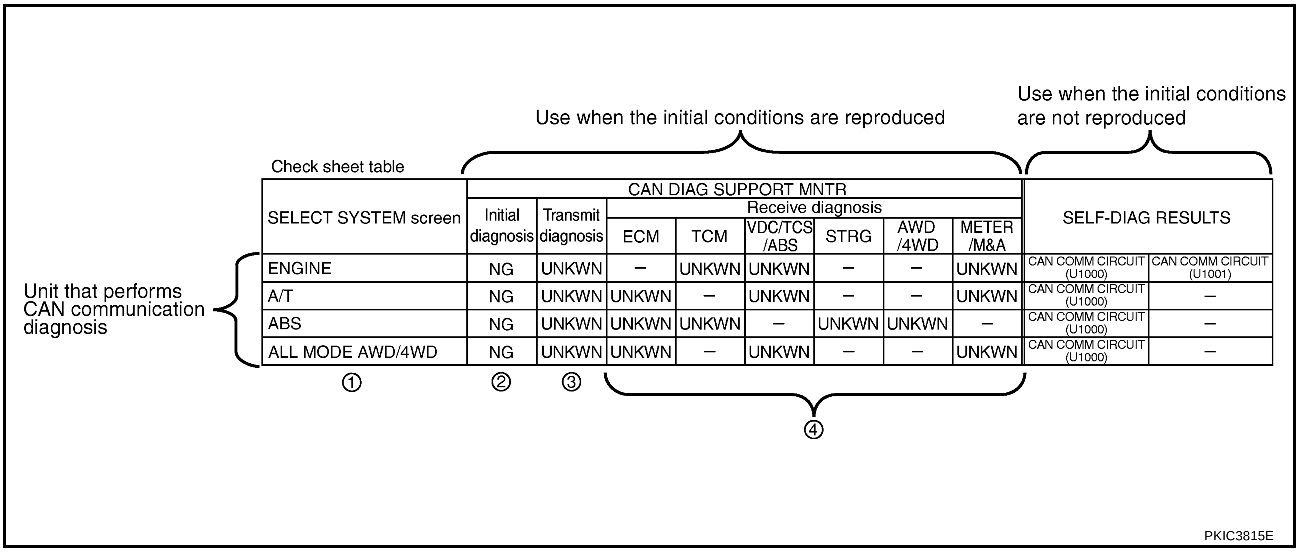

SELECT SYSTEM screen	CAN DIAG SUPPORT MNTR								SELF-DIAG RESULTS	
	Initial diagnosis	Transmit diagnosis	Receive diagnosis							
			ECM	TCM	VDC/TCS /ABS	STRG	AWD /4WD	METER /M&A		
ENGINE	NG	UNKWN	–	UNKWN	UNKWN	–	–	UNKWN	CAN COMM CIRCUIT (U1000)	CAN COMM CIRCUIT (U1001)
A/T	NG	UNKWN	UNKWN	–	UNKWN	–	–	UNKWN	CAN COMM CIRCUIT (U1000)	–
ABS	NG	UNKWN	UNKWN	UNKWN	–	UNKWN	UNKWN	–	CAN COMM CIRCUIT (U1000)	–
ALL MODE AWD/4WD	NG	UNKWN	UNKWN	–	UNKWN	–	–	UNKWN	CAN COMM CIRCUIT (U1000)	–

1. Unit names displayed on CONSULT-II
2. “NG”: Display “NG” when malfunction is detected in the initial diagnosis of the diagnosed unit. Replace the unit if “NG” is displayed.
   “–”: Column not used (Initial diagnosis is not performed.)
3. “UNKWN”: Display “UNKWN” when the diagnosed unit does not transmit the data normally. Put a check mark to it if “UNKWN” is displayed on CONSULT-II.
4. “UNKWN”: Display “UNKWN” when the diagnosed unit does not receive the data normally. Put a check mark to it if “UNKWN” is displayed on CONSULT-II.
   “–”: Column not used (It is not necessary for CAN communication trouble diagnosis.)

NOTE:
CAN communication diagnosis checks if CAN communication works normally. (Contents of data are not diagnosed.)

- When the initial conditions are reproduced, refer to LAN-9, "Example of Filling in Check Sheet When Initial Conditions Are Reproduced" .
- When the initial conditions are not reproduced, refer to LAN-11, "Example of Filling in Check Sheet When Initial Conditions Are Not Reproduced" .

Example of Filling in Check Sheet When Initial Conditions Are Reproduced

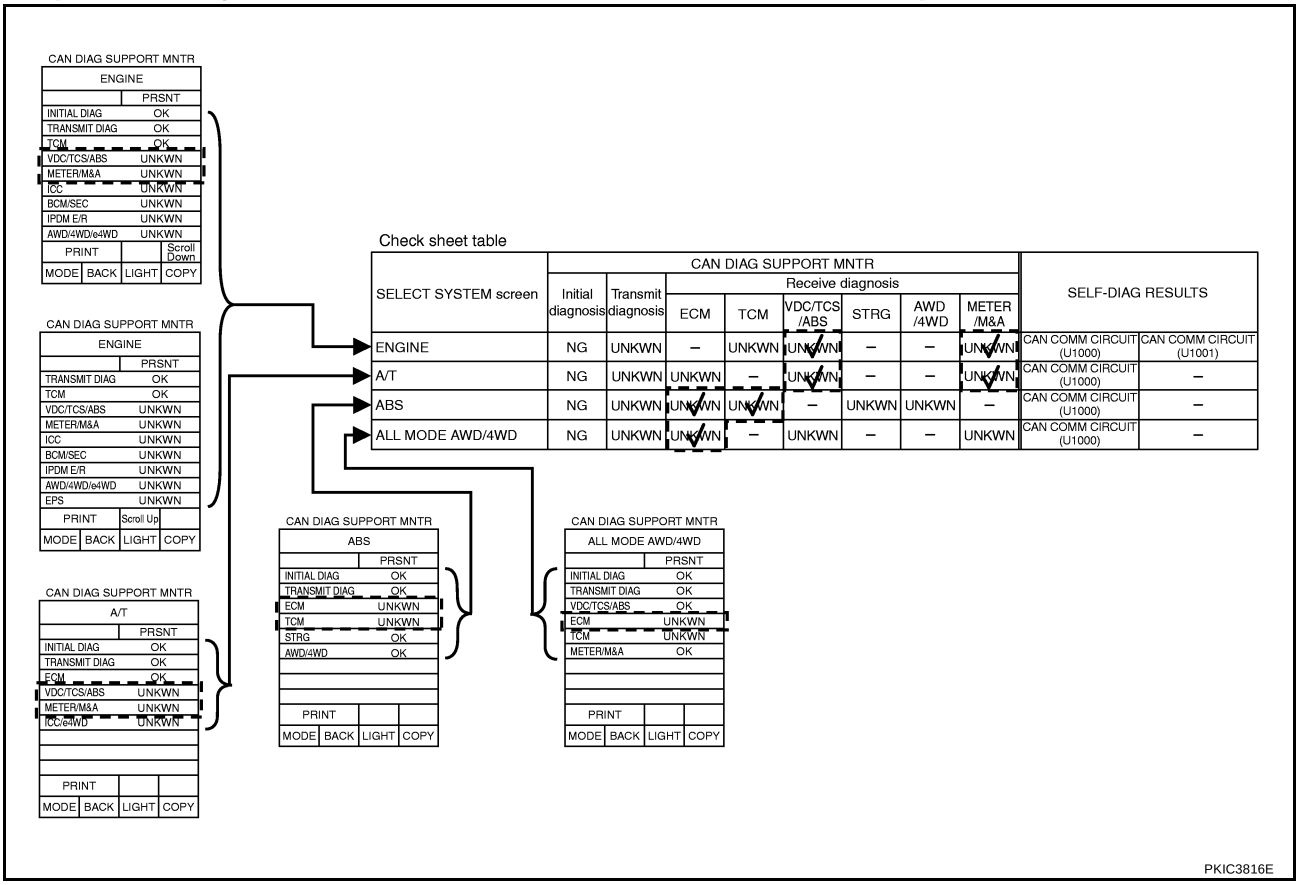

1. Confirm the unit name that “UNKWN” is displayed from the copy of “CAN DIAG SUPPORT MNTR” screen of “ENGINE” attached to the check sheet, and then put a check mark to the check sheet table.

   NOTE:
   In “CAN DIAG SUPPORT MNTR” screen, “UNKWN” is displayed on “VDC/TCS/ABS”, “METER/M&A”, “ICC”, “BCM/SEC”, “IPDM E/R”, “AWD/4WD/e4WD” and “EPS”. But put a check mark to “VDC/TCS/ABS” and “METER/M&A” because “UNKWN” is listed on the column of reception diagnosis of the check sheet table.

2. Confirm the unit name that “UNKWN” is displayed on the copy of “CAN DIAG SUPPORT MNTR” screen of “A/T”, “ABS” and “ALL MODE AWD/4WD” as well as “ENGINE”. And then, put a check mark to the check sheet table.

   NOTE:
   - For “A/T”, “UNKWN” is displayed on “VDC/TCS/ABS”, “METER/M&A” and “ICC/e4WD”. But put a check mark to “VDC/TCS/ABS” and “METER/M&A” because “UNKWN” is listed on the column of reception diagnosis of the check sheet table.
   - For “ABS”, “UNKWN” is displayed on “ECM” and “TCM”. Put a check mark to it.
   - For “ALL MODE AWD/4WD”, “UNKWN” is displayed on “ECM” and “TCM”. But put a check mark to “ECM” because “UNKWN” is listed on the column of reception diagnosis of the check sheet table.

The arranged results of CAN diagnosis support monitor

Check sheet table

SELECT SYSTEM screen	CAN DIAG SUPPORT MNTR								SELF-DIAG RESULTS	
	Initial diagnosis	Transmit diagnosis	Receive diagnosis							
			ECM	TCM	VDC/TCS/ABS	STRG	AWD/4WD	METER/M&A		
ENGINE	NG	UNKWN	–	UNKWN	UNKWN ✓	–	–	UNKWN ✓	CAN COMM CIRCUIT (U1000)	CAN COMM CIRCUIT (U1001)
A/T	NG	UNKWN	UNKWN	–	UNKWN ✓	–	–	UNKWN ✓	CAN COMM CIRCUIT (U1000)	–
ABS	NG	UNKWN	UNKWN ✓	UNKWN ✓	–	UNKWN	UNKWN	–	CAN COMM CIRCUIT (U1000)	–
ALL MODE AWD/4WD	NG	UNKWN	UNKWN ✓	–	UNKWN	–	–	UNKWN	CAN COMM CIRCUIT (U1000)	–

Choose similar indications between the results of CAN diagnosis support monitor and the results of the check sheet. Malfunctioning parts are found.

Case 1

Check harness between TCM and VDC/TCS/ABS control unit.

Check sheet results (example)

SELECT SYSTEM screen	CAN DIAG SUPPORT MNTR								SELF-DIAG RESULTS	
	Initial diagnosis	Transmit diagnosis	Receive diagnosis							
			ECM	TCM	VDC/TCS/ABS	STRG	AWD/4WD	METER/M&A		
ENGINE	NG	UNKWN	–	UNKWN	UNKWN ✓	–	–	UNKWN ✓	CAN COMM CIRCUIT (U1000)	CAN COMM CIRCUIT (U1001) ✓
A/T	NG	UNKWN	UNKWN	–	UNKWN ✓	–	–	UNKWN ✓	CAN COMM CIRCUIT (U1000) ✓	–
ABS	NG	UNKWN	UNKWN ✓	UNKWN ✓	–	UNKWN	UNKWN	–	CAN COMM CIRCUIT (U1000) ✓	–
ALL MODE AWD/4WD	NG	UNKWN	–	–	UNKWN	–	–	UNKWN	–	–

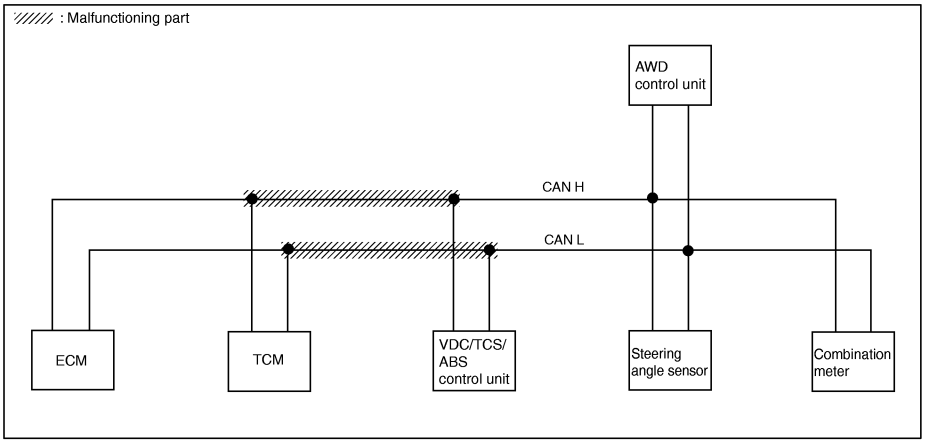

PKIC3817E

NOTE:

There is a check mark in “ECM” of “ALL MODE AWD/4WD” in “The arranged results of CAN diagnosis support monitor” sheet. Also, there is a mark of “–” in “ECM” of “ALL MODE AWD/4WD” in the check sheet results (example). Therefore, ignore a check mark in “ECM” of “ALL MODE AWD/4WD” in “The arranged results of CAN diagnosis support monitor” sheet.

3. Perform system diagnosis for possible causes identified.
4. Perform diagnosis again after inspection and repair. Make sure that repair is completely performed, and then end the procedure.

Start CAN system trouble diagnosis if this procedure can be confirmed. Refer to LAN-21, "CAN Communication Unit" .

Example of Filling in Check Sheet When Initial Conditions Are Not Reproduced

Check sheet table

SELECT SYSTEM screen	CAN DIAG SUPPORT MNTR								SELF-DIAG RESULTS	
	Initial diagnosis	Transmit diagnosis	Receive diagnosis							
			ECM	TCM	VDC/TCS /ABS	STRG	AWD /4WD	METER /M&A		
ENGINE	NG	UNKWN	–	UNKWN	UNKWN	–	–	UNKWN	CAN COMM CIRCUIT (U1000)	CAN COMM CIRCUIT (U1001) ✓
A/T	NG	UNKWN	UNKWN	–	UNKWN	–	–	UNKWN	CAN COMM CIRCUIT (U1000) ✓	–
ABS	NG	UNKWN	UNKWN	UNKWN	–	UNKWN	UNKWN	–	CAN COMM CIRCUIT (U1000) ✓	–
ALL MODE AWD/4WD	NG	UNKWN	UNKWN	–	UNKWN	–	–	UNKWN	CAN COMM CIRCUIT (U1000)	–

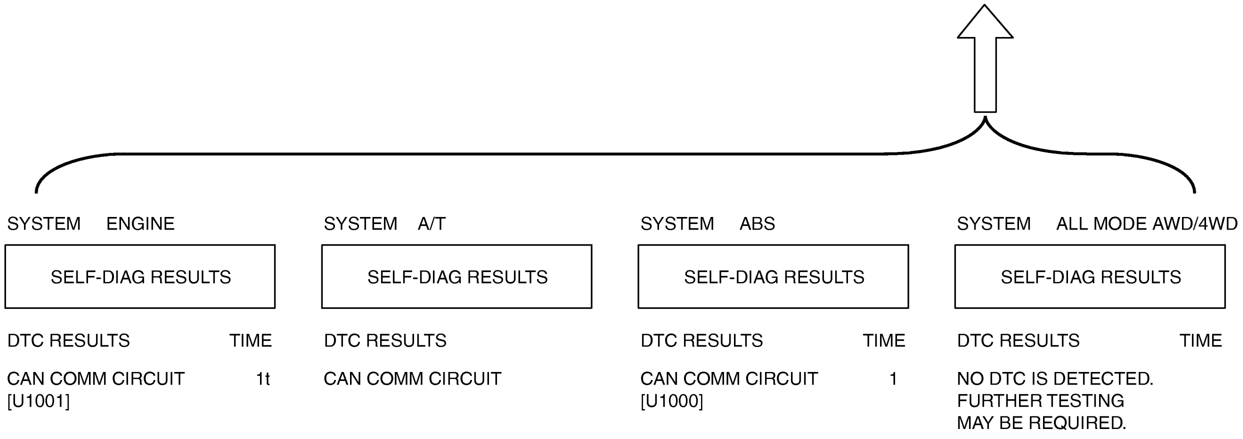

PKIC3818E

1. See “SELF-DIAG RESULTS” of all units attached to the check sheet. If “CAN COMM CIRCUIT”, “CAN COMM CIRCUIT [U1000]” or “CAN COMM CIRCUIT [U1001]” is displayed, put a check mark to the applicable column of self-diagnostic results of the check sheet table.

NOTE:
- For “ENGINE”, “CAN COMM CIRCUIT [U1001]” is displayed. Put a check mark to it.
- For “A/T”, “CAN COMM CIRCUIT” is displayed. Put a check mark to it.
- For “ABS”, “CAN COMM CIRCUIT [U1000]” is displayed. Put a check mark to it.
- For “ALL MODE AWD/4WD”, “NO DTC IS DETECTED” is displayed. Do not put a check mark to it.

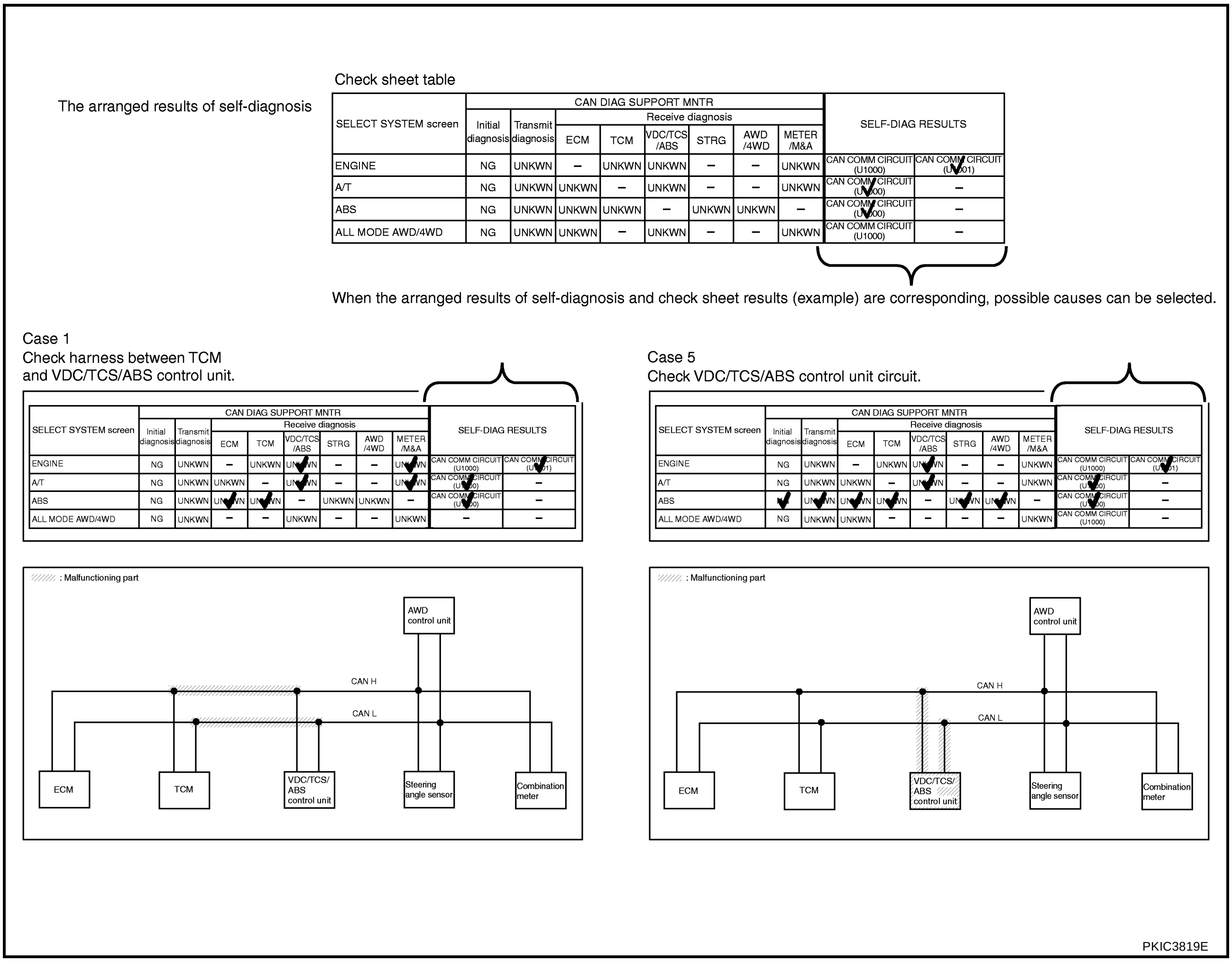

NOTE:
There is a case that some of “CAN DIAG SUPPORT MNTR” and “SELF-DIAG RESULTS” are not needed for diagnosis. In the case, “UNKWN” and “CAN COMM CIRCUIT (U1000)” in “Check sheet results (example)” change to “–”. Then, ignore check marks on the check sheet table.

2. For the selected possible causes, it is expected that malfunctions have been found in the past.

CAN Diagnostic Support Monitor

AKS00BQH

DESCRIPTION OF “CAN DIAG SUPPORT MNTR” SCREEN FOR ECM

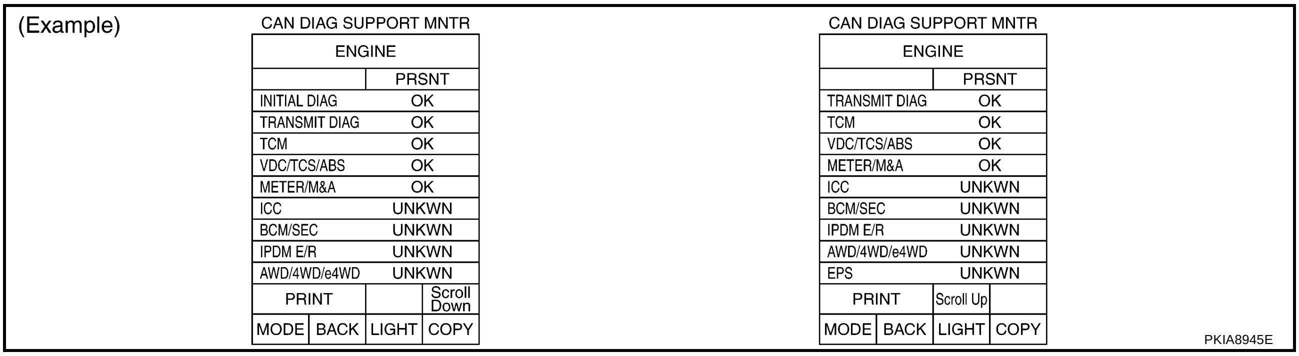

“SELECT SYSTEM” screen	“CAN DIAG SUPPORT MNTR” screen	Description	Present
ENGINE	INITIAL DIAG	Make sure that microcomputer in ECU works normally.	OK/NG
	TRANSMIT DIAG	Make sure of normal transmission.	OK/UNKWN
	TCM	Make sure of normal reception from TCM.	OK/UNKWN
	VDC/TCS/ABS	VDC/TCS/ABS is not diagnosed. (ABS model)	UNKWN
		Make sure of normal reception from VDC/TCS/ABS control unit. (VDC model)	OK/UNKWN
	METER/M&A	Make sure of normal reception from combination meter.	OK/UNKWN
	ICC	ICC is not diagnosed.	UNKWN
	BCM/SEC	BCM/SEC is not diagnosed.	UNKWN
	IPDM E/R	IPDM E/R is not diagnosed.	UNKWN
	AWD/4WD/e4WD	AWD/4WD/e4WD is not diagnosed.	UNKWN
	EPS	EPS is not diagnosed.	UNKWN

Display Results (Present)

- OK: Normal
- NG: Malfunction
- UNKWN: The diagnosed unit does not transmit or receive the applicable data normally.

DESCRIPTION OF “CAN DIAG SUPPORT MNTR” SCREEN FOR TCM

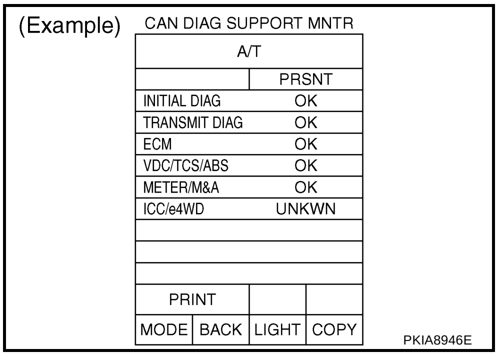

“SELECT SYSTEM” screen	“CAN DIAG SUPPORT MNTR” screen	Description	Present
A/T	INITIAL DIAG	Make sure that microcomputer in ECU works normally.	OK/NG
	TRANSMIT DIAG	Make sure of normal transmission.	OK/UNKWN
	ECM	Make sure of normal reception from ECM.	OK/UNKWN
	VDC/TCS/ABS	VDC/TCS/ABS is not diagnosed. (ABS model)	UNKWN
		Make sure of normal reception from VDC/TCS/ABS control unit. (VDC model)	OK/UNKWN
	METER/M&A	Make sure of normal reception from combination meter.	OK/UNKWN
	ICC/e4WD	ICC/e4WD is not diagnosed.	UNKWN

Display Results (Present)

- OK: Normal
- NG: Malfunction
- UNKWN: The diagnosed unit does not transmit or receive the applicable data normally.

DESCRIPTION OF “CAN DIAG SUPPORT MNTR” SCREEN FOR ABS ACTUATOR AND ELECTRIC UNIT (CONTROL UNIT)

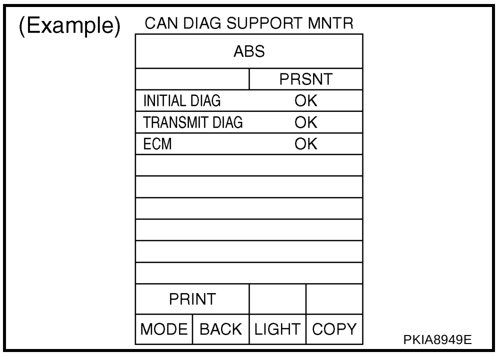

“SELECT SYSTEM” screen	“CAN DIAG SUPPORT MNTR” screen	Description	Present
ABS	INITIAL DIAG	Make sure that microcomputer in ECU works normally.	OK/NG
	TRANSMIT DIAG	Make sure of normal transmission.	OK/UNKWN
	ECM	Make sure of normal reception from ECM.	OK/UNKWN

Display Results (Present)

- OK: Normal
- NG: Malfunction
- UNKWN: The diagnosed unit does not transmit or receive the applicable data normally.

DESCRIPTION OF “CAN DIAG SUPPORT MNTR” SCREEN FOR VDC/TCS/ABS CONTROL UNIT

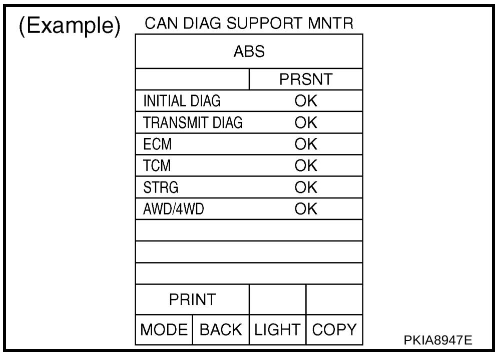

PKIA8947E

“SELECT SYSTEM” screen	“CAN DIAG SUPPORT MNTR” screen	Description	Present
ABS	INITIAL DIAG	Make sure that microcomputer in ECU works normally.	OK/NG
	TRANSMIT DIAG	Make sure of normal transmission.	OK/UNKWN
	ECM	Make sure of normal reception from ECM.	OK/UNKWN
	TCM	Make sure of normal reception from TCM.	OK/UNKWN
	STRG	Make sure of normal reception from steering angle sensor.	OK/UNKWN
	AWD/4WD	Make sure of normal reception from AWD control unit.	OK/UNKWN

Display Results (Present)

- OK: Normal
- NG: Malfunction
- UNKWN: The diagnosed unit does not transmit or receive the applicable data normally.

DESCRIPTION OF “CAN DIAG SUPPORT MNTR” SCREEN FOR AWD CONTROL UNIT

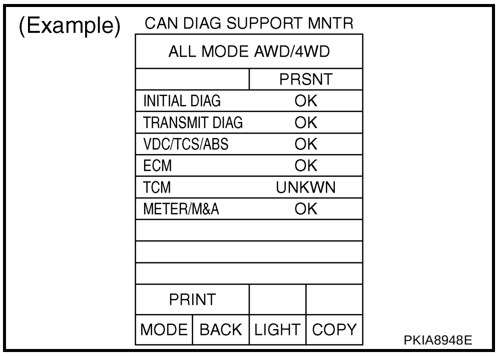

PKIA8948E

“SELECT SYSTEM” screen	“CAN DIAG SUPPORT MNTR” screen	Description	Present
ALL MODE AWD/ 4WD	INITIAL DIAG	Make sure that microcomputer in ECU works normally.	OK/NG
	TRANSMIT DIAG	Make sure of normal transmission.	OK/UNKWN
	VDC/TCS/ABS	Make sure of normal reception from ABS actuator and electric unit (control unit).	OK/UNKWN
		Make sure of normal reception from VDC/TCS/ABS control unit.	OK/UNKWN
	ECM	Make sure of normal reception from ECM.	OK/UNKWN
	TCM	TCM is not diagnosed.	UNKWN
	METER/M&A	Make sure of normal reception from combination meter.	OK/UNKWN

Display Results (Present)

- OK: Normal
- NG: Malfunction
- UNKWN: The diagnosed unit does not transmit or receive the applicable data normally.

CAN COMMUNICATION

PFP:23710

System Description

AKS00BCK

CAN (Controller Area Network) is a serial communication line for real time application. It is an on-vehicle multiplex communication line with high data communication speed and excellent error detection ability. Many electronic control units are equipped onto a vehicle, and each control unit shares information and links with other control units during operation (not independent). In CAN communication, control units are connected with 2 communication lines (CAN H line, CAN L line) allowing a high rate of information transmission with less wiring. Each control unit transmits/receives data but selectively reads required data only.

Component Parts and Harness Connector Location

AKS00FC9

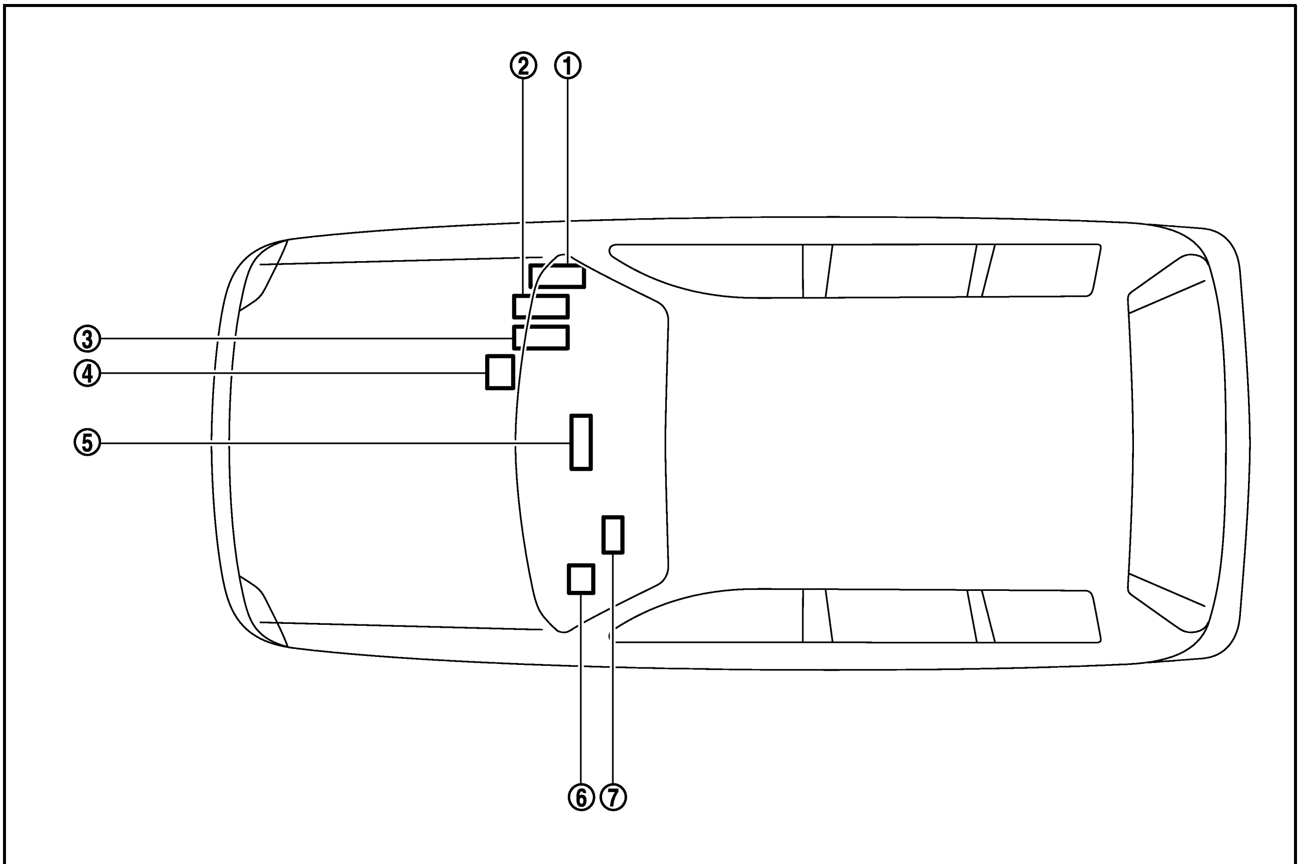

PKIC3065E

1. TCM F46 (with A/T)
2. VDC/TCS/ABS control unit E122 (with VDC)
3. ECM M118
4. ABS actuator and electric unit (control unit) E69 (with ABS)
5. Combination meter M44
6. AWD control unit M107 (with AWD)
7. Steering angle sensor M81 (with VDC)

Schematic

AKS00FCA

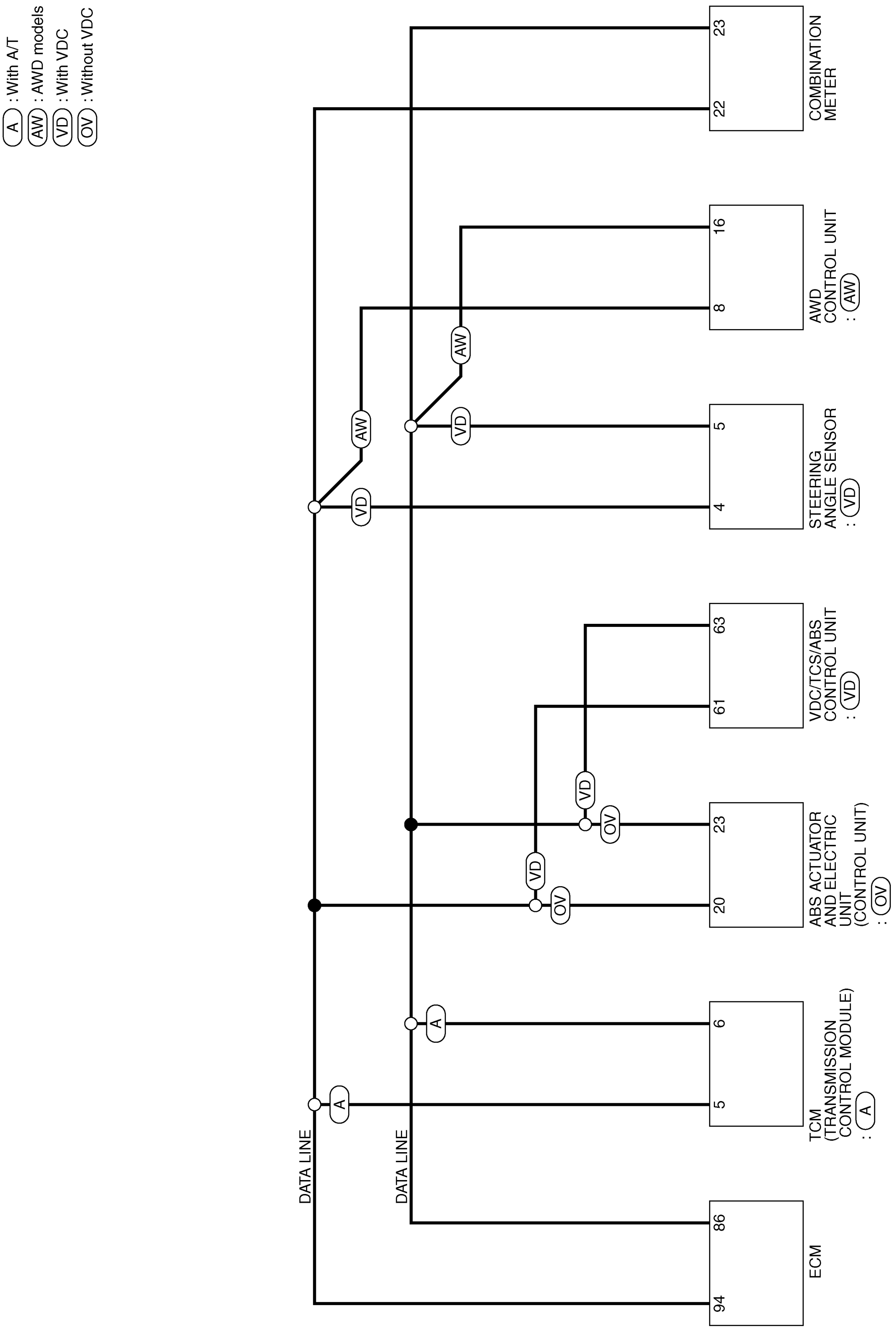

TKWB2503E

Wiring Diagram — CAN —

AKS00FCB

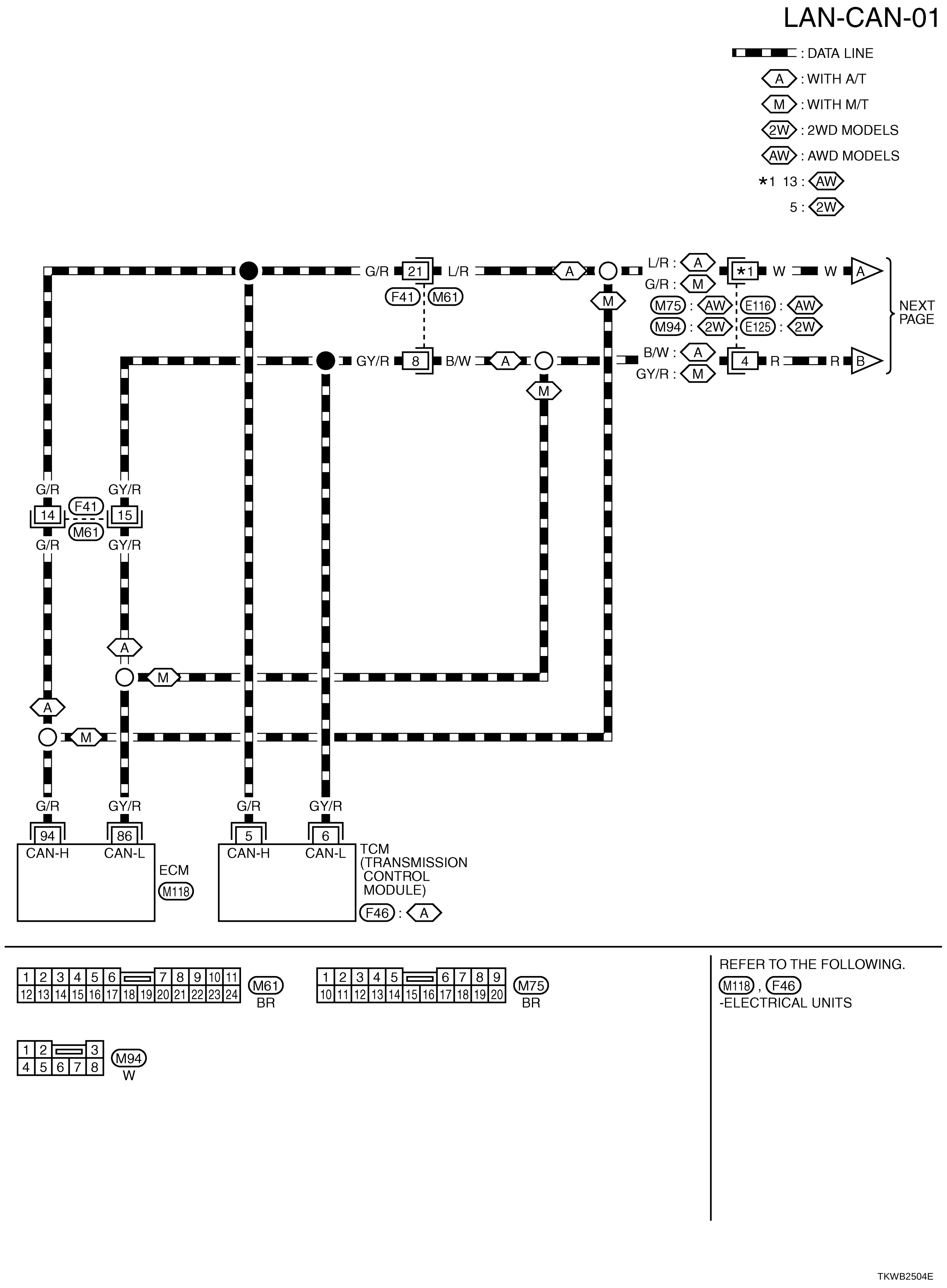

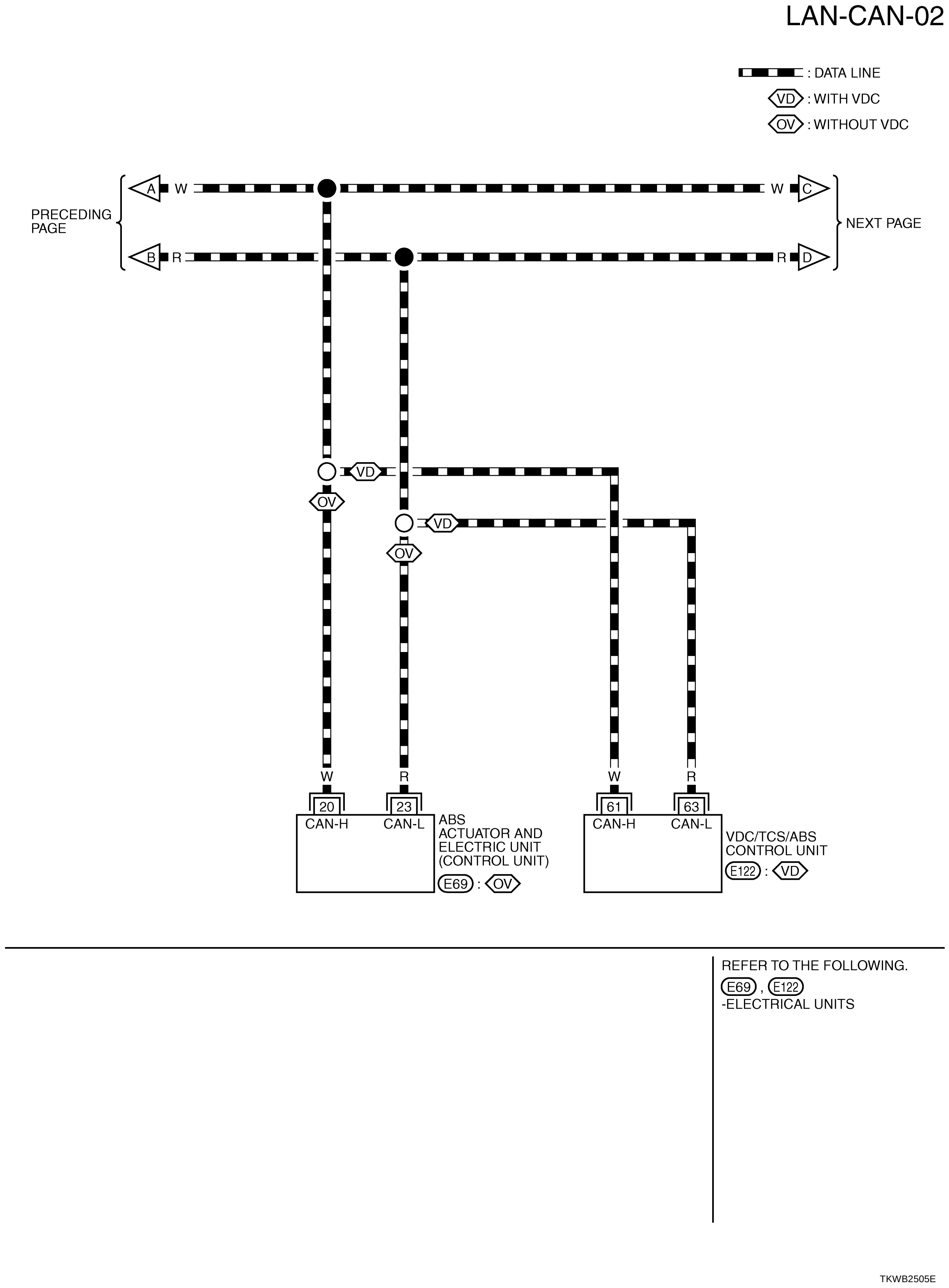
LAN-CAN-02
: DATA LINE
VD : WITH VDC
OV : WITHOUT VDC
A W
W C
PRECEDING PAGE
NEXT PAGE
B R
R D
VD
OV
VD
OV
W
R
W
R
20
23
CAN-H
CAN-L
ABS ACTUATOR AND ELECTRIC UNIT (CONTROL UNIT)
E69 : OV
61
63
CAN-H
CAN-L
VDC/TCS/ABS CONTROL UNIT
E122 : VD
REFER TO THE FOLLOWING.
E69 , E122
-ELECTRICAL UNITS
TKWB2505E

LAN-CAN-03

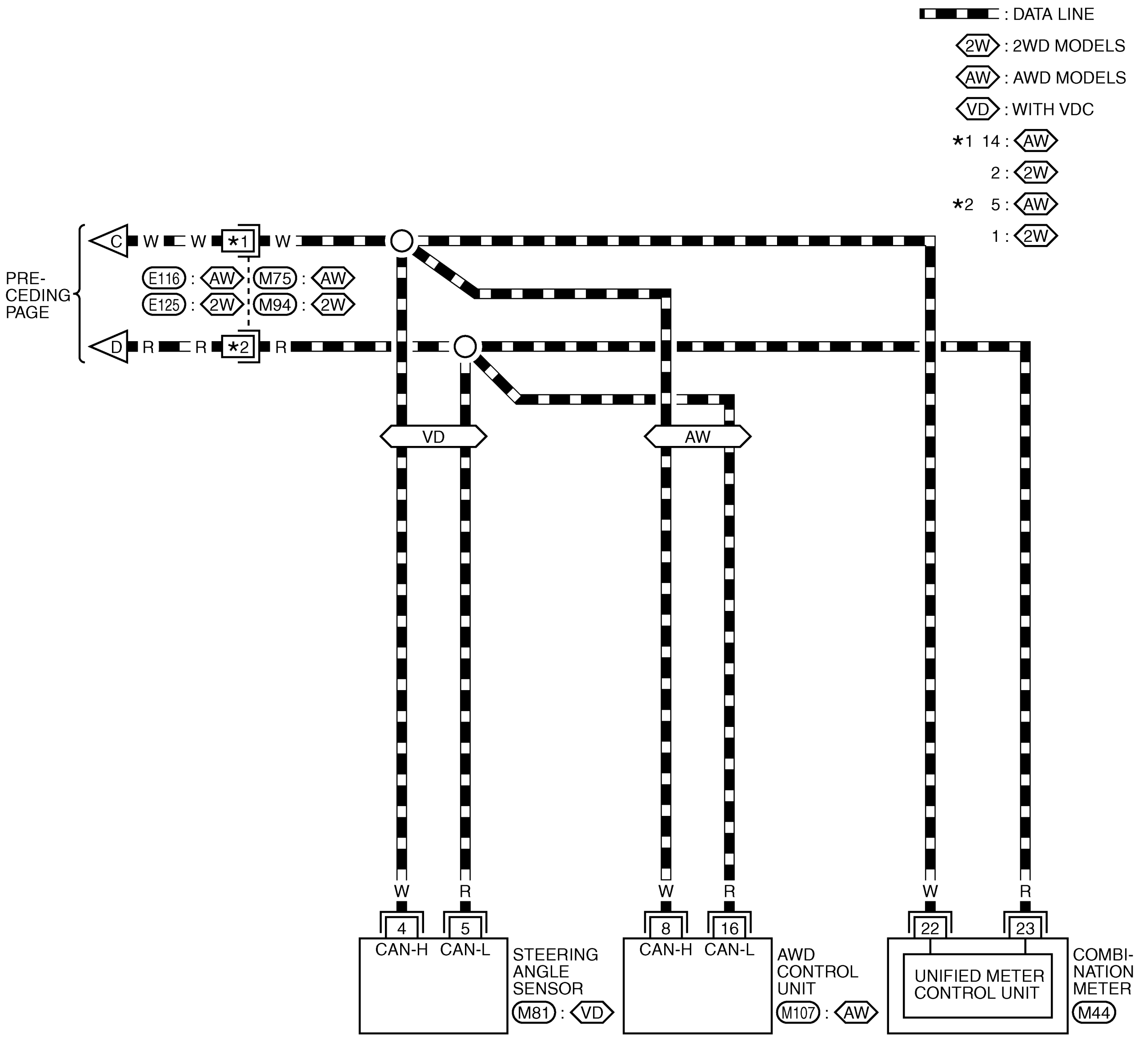

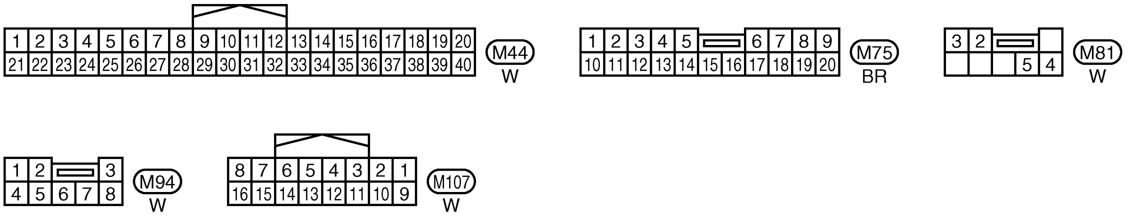

TKWB2506E

CAN Communication Unit

AKS00BCL

Go to CAN system, when selecting your CAN system type from the following table.

Body type	Wagon				
Axle	2WD	AWD			
Engine	QR25DE				
Transmission	A/T	M/T	A/T	M/T	A/T
Brake control	ABS			VDC	
CAN system type	1	2	3	4	5
CAN system trouble diagnosis	LAN-27	LAN-34	LAN-41	LAN-50	LAN-58

Vehicles equipped with VDC can be identified by the presence of a VDC OFF switch.

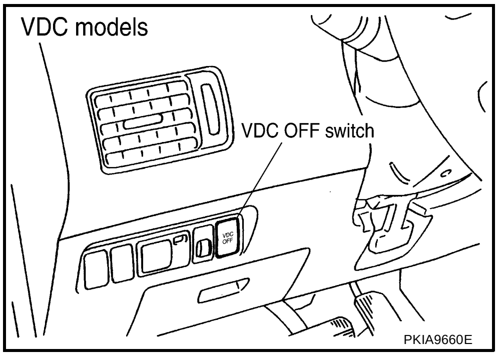

TYPE 1

System Diagram

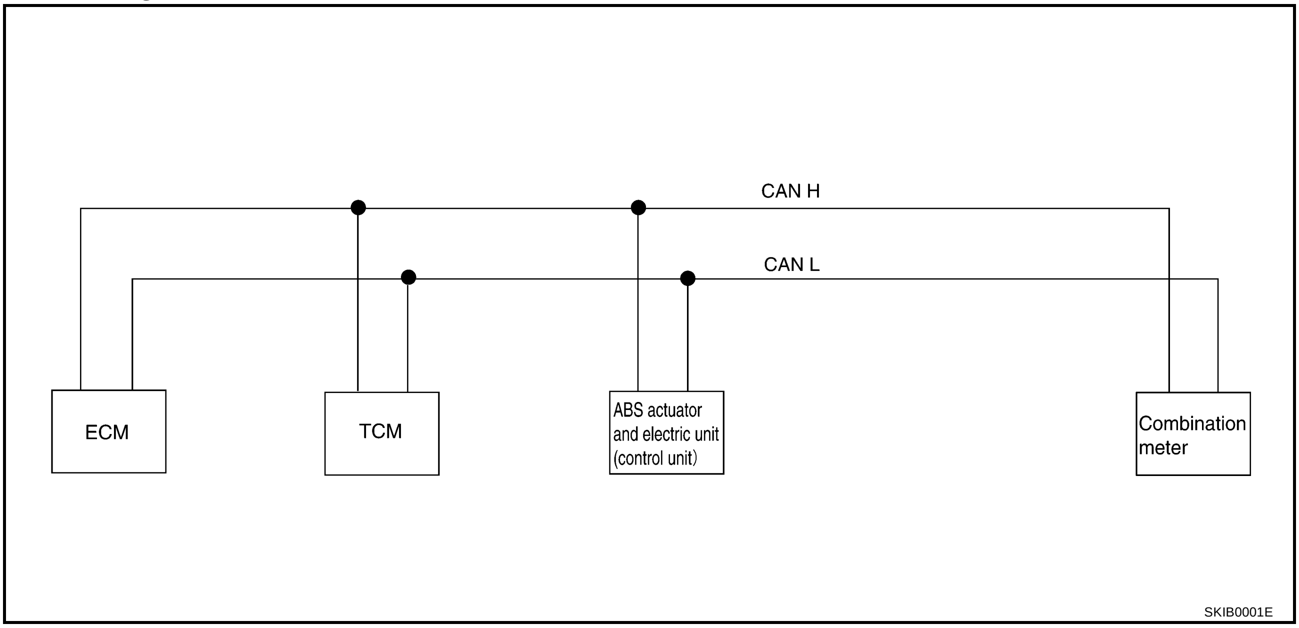

Input/Output Signal Chart

T: Transmit R: Receive

Signals	ECM	TCM	ABS actuator and electric unit (control unit)	Combination meter
Stop lamp switch signal		R		T
A/T self-diagnosis signal	R	T		
A/T position indicator lamp signal		T		R
Overdrive control switch signal		R		T
OD OFF indicator signal		T		R
Closed throttle position signal	T	R		

Signals	ECM	TCM	ABS actuator and electric unit (control unit)	Combination meter
Wide open throttle position signal	T	R		
Engine speed signal	T			R
Engine coolant temperature signal	T			R
Output shaft revolution signal	R	T		
A/C compressor feedback signal	T			R
Vehicle speed signal			T	R
	R			T
ABS warning lamp signal			T	R
Fuel level sensor signal	R			T
Malfunction indicator lamp signal	T			R
ASCD SET lamp signal	T			R
ASCD CRUISE lamp signal	T			R
Engine and A/T integrated control signal	T	R		
	R	T		
Snow mode switch signal	R			T

TYPE 2

System Diagram

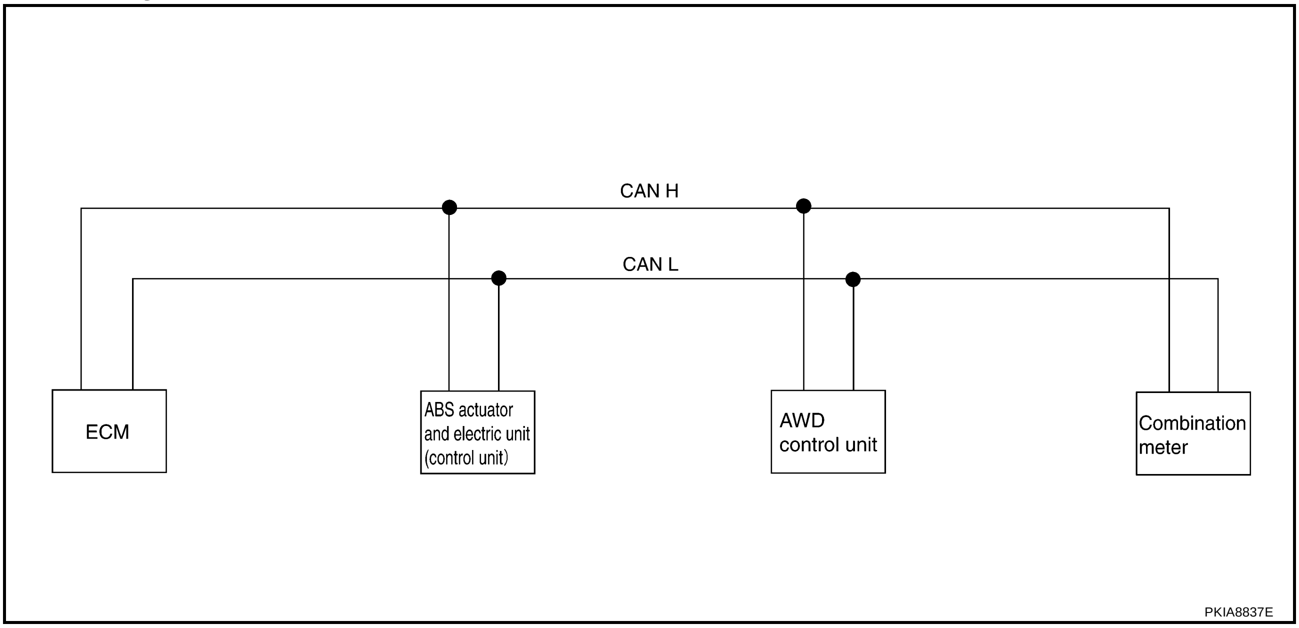

Input/Output Signal Chart

T: Transmit R: Receive

Signals	ECM	ABS actuator and electric unit (control unit)	AWD control unit	Combination meter
Stop lamp switch signal		T	R	
Engine speed signal	T		R	R
Engine coolant temperature signal	T			R
Accelerator pedal position signal	T		R	
A/C compressor feedback signal	T			R

Signals		ECM	ABS actuator and electric unit (control unit)	AWD control unit	Combination meter
Vehicle speed signal			T	R	R
		R			T
ABS warning lamp signal			T		R
AWD warning lamp signal				T	R
AWD mode indicator lamp signal				T	R
Parking brake switch signal				R	T
Fuel level sensor signal		R			T
Malfunction indicator lamp signal		T			R
ASCD SET lamp signal		T			R
ASCD CRUISE lamp signal		T			R

TYPE 3

System Diagram

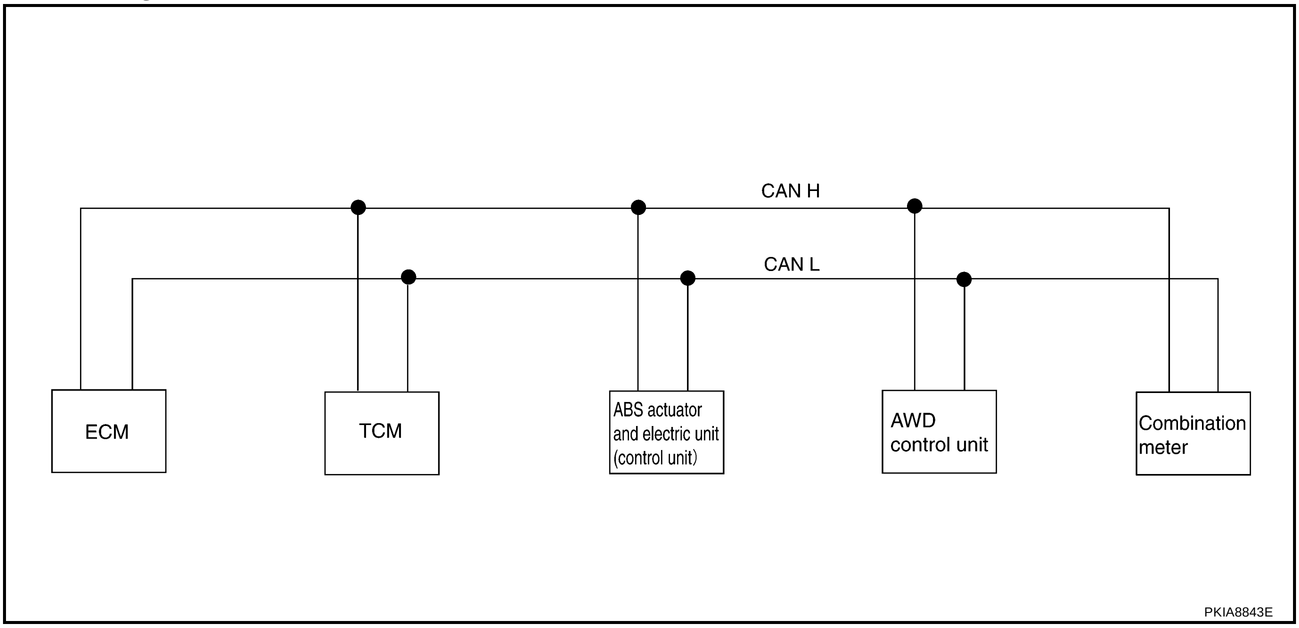

Input/Output Signal Chart

T: Transmit R: Receive

Signals	ECM	TCM	ABS actuator and electric unit (control unit)	AWD control unit	Combination meter
Stop lamp switch signal		R			T
			T	R	
A/T self-diagnosis signal	R	T			
A/T position indicator lamp signal		T			R
Overdrive control switch signal		R			T
OD OFF indicator signal		T			R
Closed throttle position signal	T	R			
Wide open throttle position signal	T	R			
Engine speed signal	T			R	R
Engine coolant temperature signal	T				R
Output shaft revolution signal	R	T			

Signals	ECM	TCM	ABS actuator and electric unit (control unit)	AWD control unit	Combination meter
A/C compressor feedback signal	T				R
Vehicle speed signal			T	R	R
	R				T
ABS warning lamp signal			T		R
AWD warning lamp signal				T	R
AWD mode indicator lamp signal				T	R
Parking brake switch signal				R	T
Fuel level sensor signal	R				T
Malfunction indicator lamp signal	T				R
ASCD SET lamp signal	T				R
ASCD CRUISE lamp signal	T				R
Engine and A/T integrated control signal	T	R			
	R	T			

TYPE 4

System Diagram

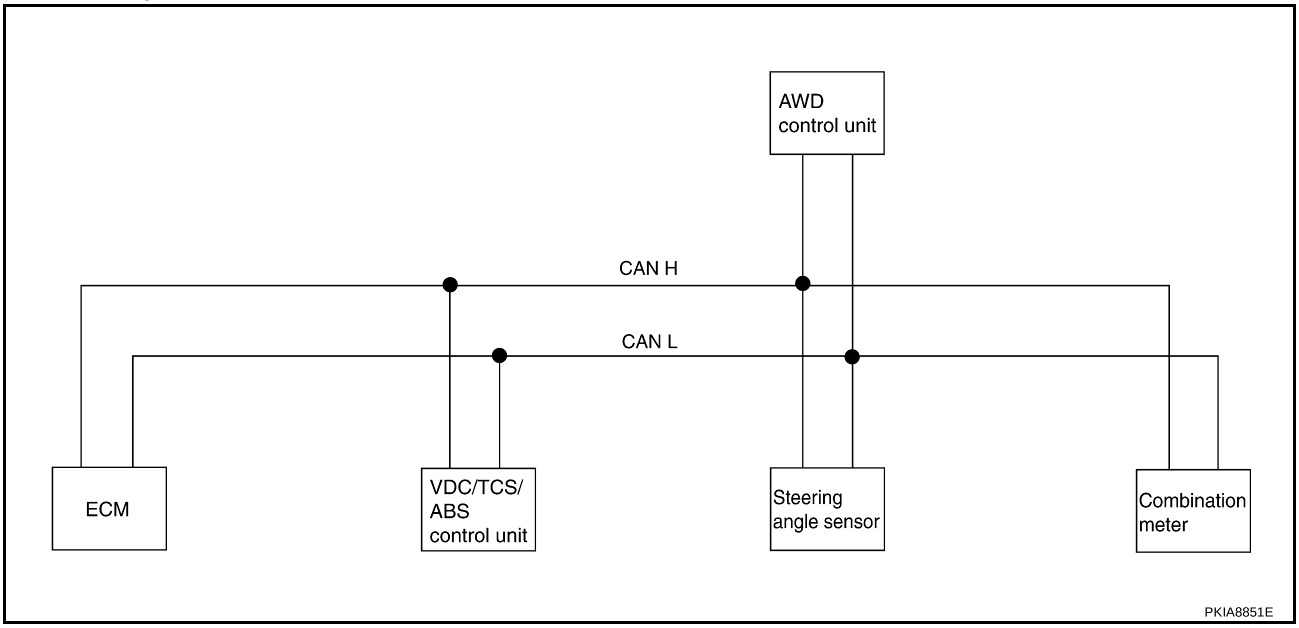

Input/Output Signal Chart

T: Transmit   R: Receive

Signals	ECM	VDC/TCS/ABS control unit	Steering angle sensor	AWD control unit	Combination meter
Stop lamp switch signal		T		R	
Engine speed signal	T	R		R	R
Engine coolant temperature signal	T				R
Accelerator pedal position signal	T	R		R	
A/C compressor feedback signal	T				R
Vehicle speed signal		T		R	R
	R				T
ABS warning lamp signal		T			R
Brake warning lamp signal		T			R

Signals	ECM	VDC/TCS/ABS control unit	Steering angle sensor	AWD control unit	Combination meter
SLIP indicator lamp signal		T			R
VDC OFF indicator lamp signal		T			R
AWD warning lamp signal				T	R
AWD mode indicator lamp signal				T	R
Parking brake switch signal				R	T
Fuel level sensor signal	R				T
Malfunction indicator lamp signal	T				R
ASCD SET lamp signal	T				R
ASCD CRUISE lamp signal	T				R
Steering angle sensor signal		R	T		

TYPE 5

System Diagram

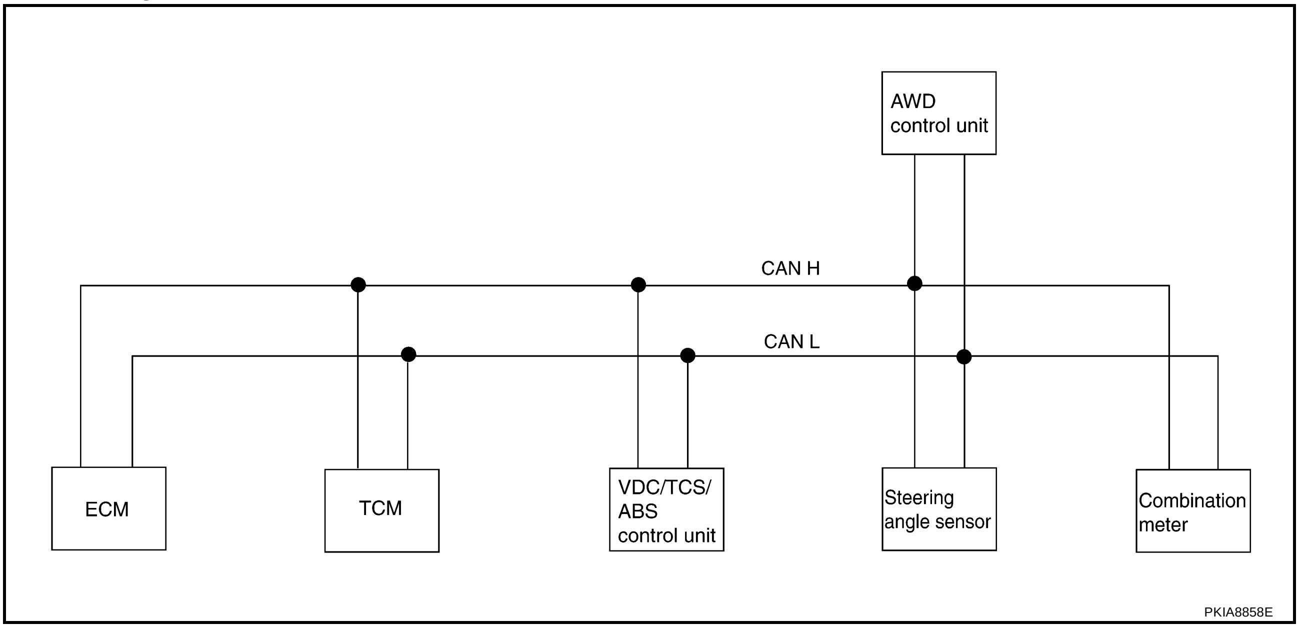

Input/Output Signal Chart

T: Transmit R: Receive

Signals	ECM	TCM	VDC/TCS/ ABS control unit	Steering angle sensor	AWD control unit	Combination meter
Stop lamp switch signal		R				T
			T		R	
A/T position indicator lamp signal		T	R			R
OD OFF indicator signal		T				R
Overdrive control switch signal		R				T
Closed throttle position signal	T	R				
Wide open throttle position signal	T	R				
Engine speed signal	T		R		R	R
Engine coolant temperature signal	T					R
Accelerator pedal position signal	T		R		R	
Output shaft revolution signal	R	T				
A/C compressor feedback signal	T					R

Signals	ECM	TCM	VDC/TCS/ ABS control unit	Steering angle sensor	AWD control unit	Combination meter
Vehicle speed signal			T		R	R
	R					T
ABS warning lamp signal			T			R
Brake warning lamp signal			T			R
SLIP indicator lamp signal			T			R
VDC OFF indicator lamp signal			T			R
AWD warning lamp signal					T	R
AWD mode indicator lamp signal					T	R
Parking brake switch signal					R	T
Fuel level sensor signal	R					T
Malfunction indicator lamp signal	T					R
ASCD SET lamp signal	T					R
ASCD CRUISE lamp signal	T					R
Steering angle sensor signal			R	T		
Engine and A/T integrated control signal	T	R				
	R	T				
A/T self-diagnosis signal	R	T				

CAN SYSTEM (TYPE 1)

PFP:23710

Component Parts and Harness Connector Location

AKS00FCC

Refer to LAN-16, "Component Parts and Harness Connector Location" .

Schematic

AKS00FCD

Refer to LAN-17, "Schematic" .

Wiring Diagram — CAN —

AKS00FCE

Refer to LAN-18, "Wiring Diagram — CAN —" .

Check Sheet

AKS00BK4

NOTE:

If a check mark is put on “NG” on “INITIAL DIAG (Initial diagnosis)”, replace the control unit.

Check sheet table

SELECT SYSTEM screen	CAN DIAG SUPPORT MNTR					SELF-DIAG RESULTS	
	Initial diagnosis	Transmit diagnosis	Receive diagnosis				
			ECM	TCM	METER /M&A		
ENGINE	NG	UNKWN	–	UNKWN	UNKWN	CAN COMM CIRCUIT (U1000)	CAN COMM CIRCUIT (U1001)
A/T	NG	UNKWN	UNKWN	–	UNKWN	CAN COMM CIRCUIT (U1000)	–
ABS	NG	UNKWN	UNKWN	–	–	CAN COMM CIRCUIT (U1000)	–

Symptoms :

Attach copy of ENGINE SELF-DIAG RESULTS	Attach copy of A/T SELF-DIAG RESULTS	Attach copy of ABS SELF-DIAG RESULTS
Attach copy of ENGINE CAN DIAG SUPPORT MNTR	Attach copy of A/T CAN DIAG SUPPORT MNTR	Attach copy of ABS CAN DIAG SUPPORT MNTR

PKIA8754E

CHECK SHEET RESULTS (EXAMPLE)

NOTE:

If a check mark is put on “NG” on “INITIAL DIAG (Initial diagnosis)”, replace the control unit.

Case 1

Check harness between TCM and ABS actuator and electric unit (control unit). Refer to LAN-68, "Inspection Between TCM and ABS Actuator and Electric Unit (Control Unit) Circuit for 2WD Model" .

SELECT SYSTEM screen	CAN DIAG SUPPORT MNTR					SELF-DIAG RESULTS	
	Initial diagnosis	Transmit diagnosis	Receive diagnosis: ECM	Receive diagnosis: TCM	Receive diagnosis: METER /M&A		
ENGINE	NG	UNKWN	–	UNKWN	UNKWN ✓	CAN COMM CIRCUIT (U1000)	CAN COMM CIRCUIT (U1001) ✓
A/T	NG	UNKWN	UNKWN	–	UNKWN ✓	CAN COMM CIRCUIT (U1000) ✓	–
ABS	NG ✓	UNKWN ✓	UNKWN ✓	–	–	CAN COMM CIRCUIT (U1000) ✓	–

PKIC3744E

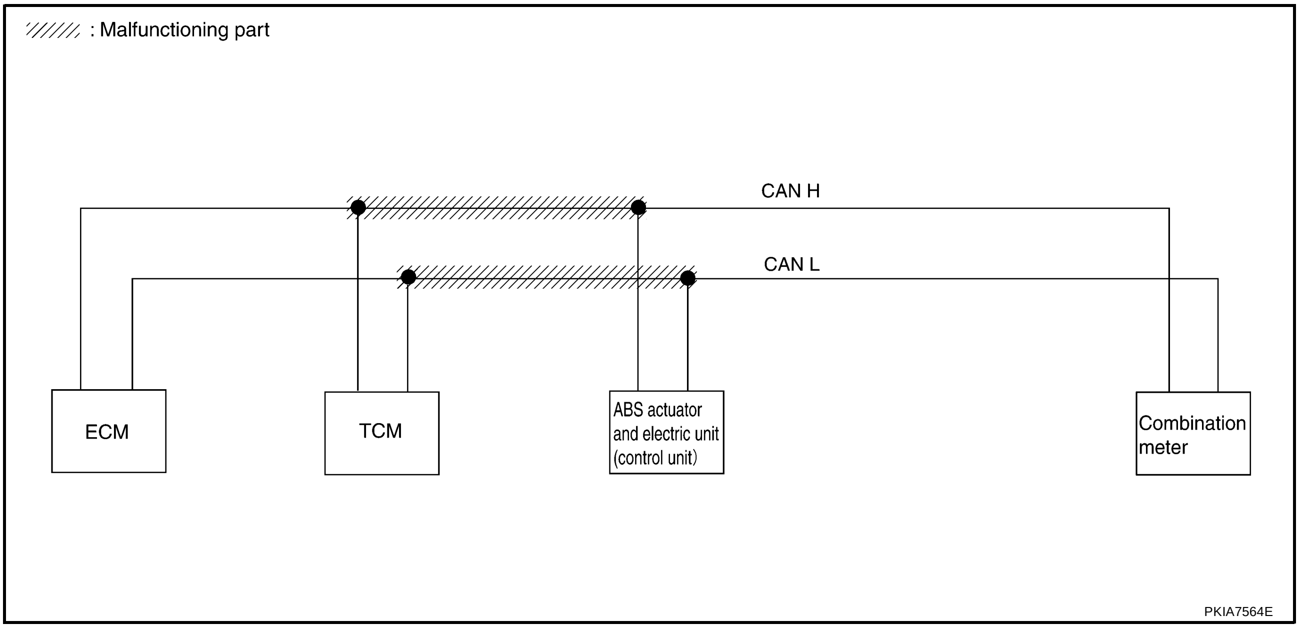

Case 2

Check ECM circuit. Refer to LAN-74, "ECM Circuit Inspection for A/T Model" .

SELECT SYSTEM screen	CAN DIAG SUPPORT MNTR					SELF-DIAG RESULTS	
	Initial diagnosis	Transmit diagnosis	Receive diagnosis				
			ECM	TCM	METER /M&A		
ENGINE	NG	UNKWN ✓	–	UNKWN ✓	UNKWN ✓	CAN COMM CIRCUIT (U1000) ✓	CAN COMM CIRCUIT (U1001) ✓
A/T	NG	UNKWN	UNKWN ✓	–	UNKWN	CAN COMM CIRCUIT (U1000) ✓	–
ABS	NG ✓	UNKWN ✓	UNKWN ✓	–	–	CAN COMM CIRCUIT (U1000) ✓	–

PKIC3745E

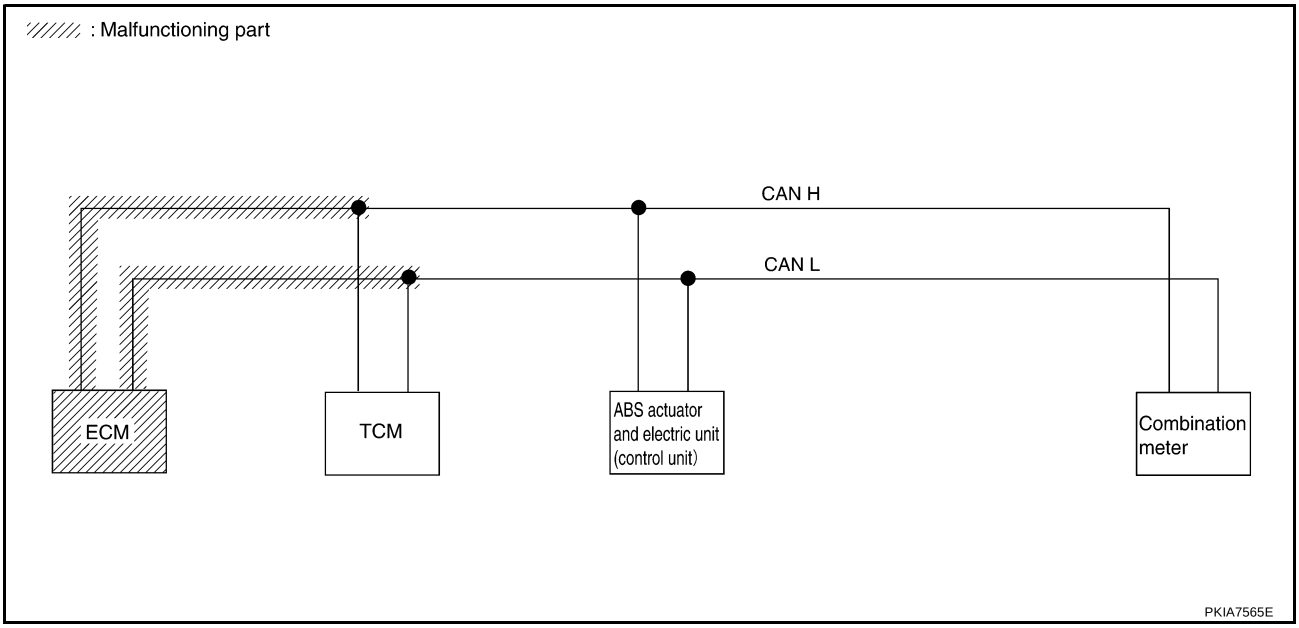

Case 3

Check TCM circuit. Refer to LAN-75, "TCM Circuit Inspection" .

SELECT SYSTEM screen	CAN DIAG SUPPORT MNTR					SELF-DIAG RESULTS	
	Initial diagnosis	Transmit diagnosis	Receive diagnosis				
			ECM	TCM	METER /M&A		
ENGINE	NG	UNKWN	–	UNKWN ✓	UNKWN	CAN COMM CIRCUIT (U1000) ✓	CAN COMM CIRCUIT (U1001) ✓
A/T	NG	UNKWN ✓	UNKWN ✓	–	UNKWN ✓	CAN COMM CIRCUIT (U1000) ✓	–
ABS	NG	UNKWN	UNKWN	–	–	CAN COMM CIRCUIT (U1000)	–

PKIC3746E

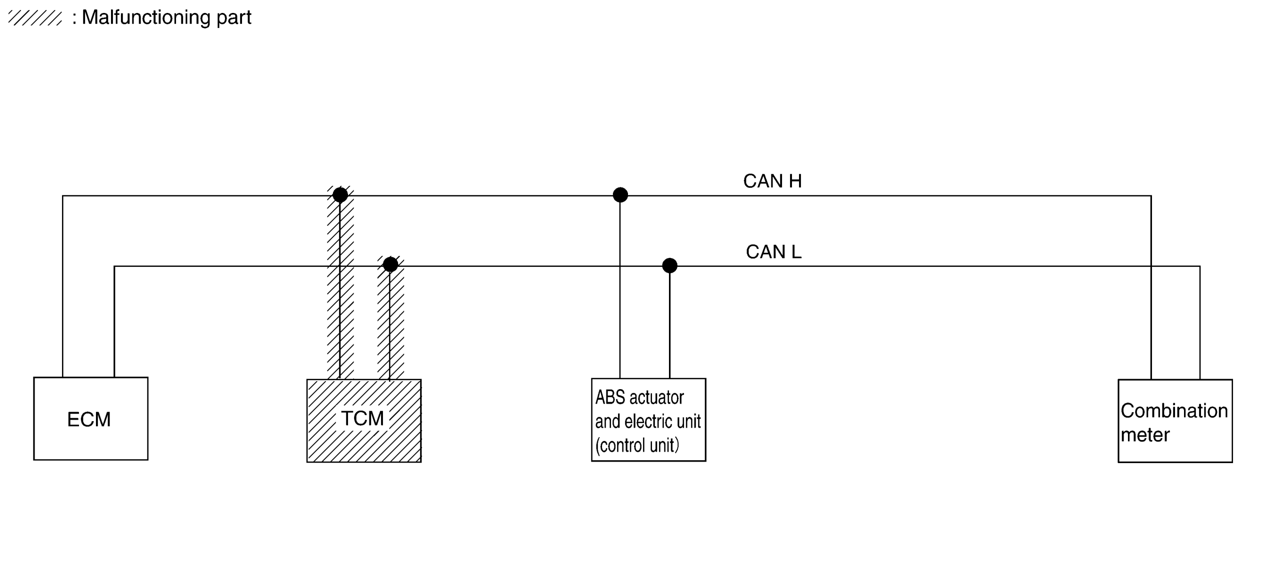

PKIA7566E

Case 4

Check ABS actuator and electric unit (control unit) circuit. Refer to LAN-75, "ABS Actuator and Electric Unit (Control Unit) Circuit Inspection" .

SELECT SYSTEM screen	CAN DIAG SUPPORT MNTR					SELF-DIAG RESULTS	
	Initial diagnosis	Transmit diagnosis	Receive diagnosis				
			ECM	TCM	METER /M&A		
ENGINE	NG	UNKWN	–	UNKWN	UNKWN	CAN COMM CIRCUIT (U1000)	CAN COMM CIRCUIT (U1001)
A/T	NG	UNKWN	UNKWN	–	UNKWN	CAN COMM CIRCUIT (U1000)	–
ABS	NG ✓	UNKWN ✓	UNKWN ✓	–	–	CAN COMM CIRCUIT (U1000) ✓	–

PKIC3747E

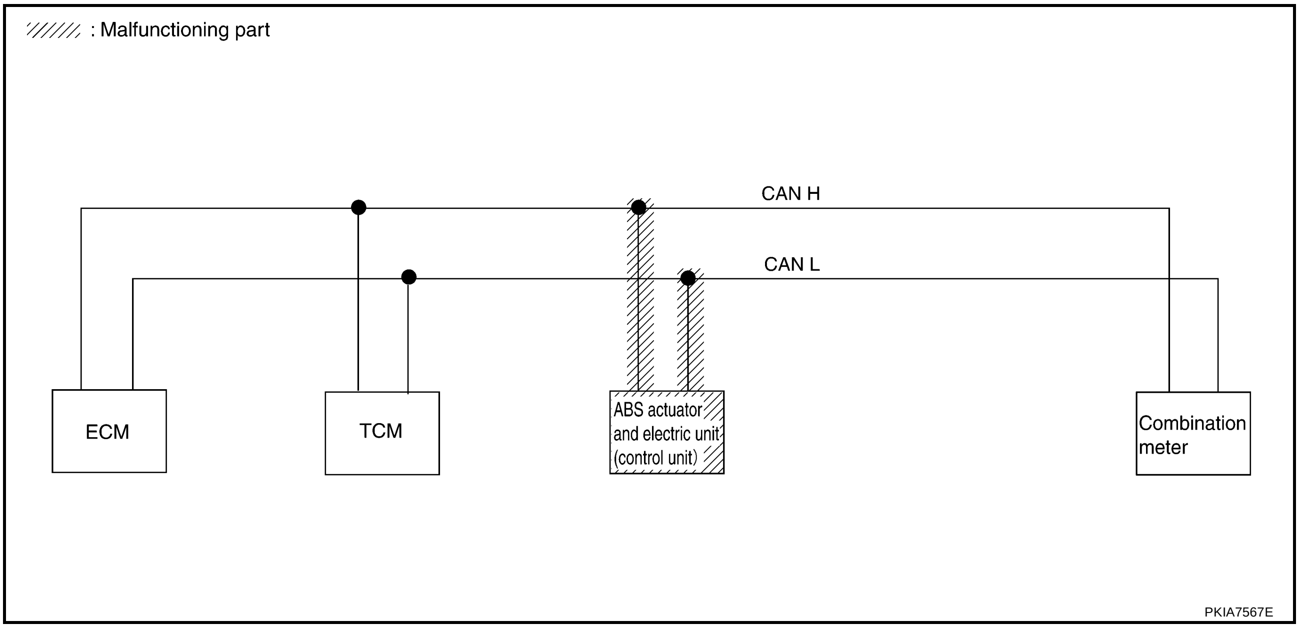

Case 5

Check combination meter circuit. Refer to LAN-77, "Combination Meter Circuit Inspection for 2WD Model" .

SELECT SYSTEM screen	CAN DIAG SUPPORT MNTR					SELF-DIAG RESULTS	
	Initial diagnosis	Transmit diagnosis	Receive diagnosis				
			ECM	TCM	METER /M&A		
ENGINE	NG	UNKWN	–	UNKWN	UNKWN ✓	CAN COMM CIRCUIT (U1000)	CAN COMM CIRCUIT (U1001) ✓
A/T	NG	UNKWN	UNKWN	–	UNKWN ✓	CAN COMM CIRCUIT (U1000) ✓	–
ABS	NG	UNKWN	UNKWN	–	–	CAN COMM CIRCUIT (U1000)	–

PKIC3748E

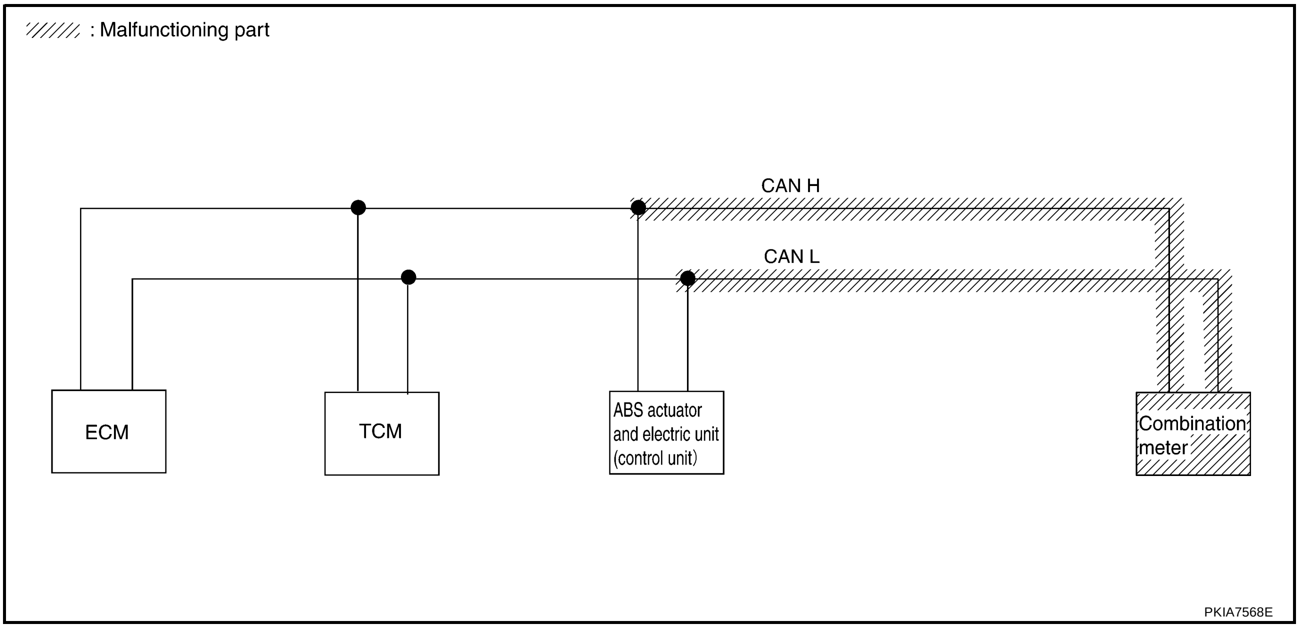

PKIA7568E

Case 6

Check CAN communication circuit. Refer to LAN-79, "CAN Communication Circuit Inspection"

SELECT SYSTEM screen	CAN DIAG SUPPORT MNTR					SELF-DIAG RESULTS	
	Initial diagnosis	Transmit diagnosis	Receive diagnosis				
			ECM	TCM	METER /M&A		
ENGINE	NG	UNKWN	–	UNKWN ✓	UNKWN ✓	CAN COMM CIRCUIT (U1000) ✓	CAN COMM CIRCUIT (U1001) ✓
A/T	NG	UNKWN ✓	UNKWN ✓	–	UNKWN ✓	CAN COMM CIRCUIT (U1000) ✓	–
ABS	NG ✓	UNKWN ✓	UNKWN ✓	–	–	CAN COMM CIRCUIT (U1000) ✓	–

PKIC3749E

CAN SYSTEM (TYPE 2)

PFP:23710

Component Parts and Harness Connector Location

AKS00FCF

Refer to LAN-16, "Component Parts and Harness Connector Location" .

Schematic

AKS00FCG

Refer to LAN-17, "Schematic" .

Wiring Diagram — CAN —

AKS00FCH

Refer to LAN-18, "Wiring Diagram — CAN —" .

Check Sheet

AKS00BKF

NOTE:

If a check mark is put on “NG” on “INITIAL DIAG (Initial diagnosis)”, replace the control unit.

Check sheet table

SELECT SYSTEM screen	CAN DIAG SUPPORT MNTR					SELF-DIAG RESULTS	
	Initial diagnosis	Transmit diagnosis	Receive diagnosis				
			ECM	VDC/TCS /ABS	METER /M&A		
ENGINE	NG	UNKWN	–	–	UNKWN	CAN COMM CIRCUIT (U1000)	CAN COMM CIRCUIT (U1001)
ABS	NG	UNKWN	UNKWN	–	–	CAN COMM CIRCUIT (U1000)	–
ALL MODE AWD/4WD	NG	UNKWN	UNKWN	UNKWN	UNKWN	CAN COMM CIRCUIT (U1000)	–

Symptoms :

Attach copy of ENGINE SELF-DIAG RESULTS

Attach copy of ABS SELF-DIAG RESULTS

Attach copy of ALL MODE AWD/4WD SELF-DIAG RESULTS

Attach copy of ENGINE CAN DIAG SUPPORT MNTR

Attach copy of ABS CAN DIAG SUPPORT MNTR

Attach copy of ALL MODE AWD/4WD CAN DIAG SUPPORT MNTR

PKIC3740E

CHECK SHEET RESULTS (EXAMPLE)

NOTE:

If a check mark is put on “NG” on “INITIAL DIAG (Initial diagnosis)”, replace the control unit.

Case 1

Check harness between ABS actuator and electric unit (control unit) and AWD control unit. Refer to LAN-72, "Inspection Between ABS Actuator and Electric Unit (Control Unit) and AWD Control Unit Circuit" .

SELECT SYSTEM screen	CAN DIAG SUPPORT MNTR					SELF-DIAG RESULTS	
	Initial diagnosis	Transmit diagnosis	Receive diagnosis				
			ECM	VDC/TCS /ABS	METER /M&A		
ENGINE	NG	UNKWN	–	–	UNKWN ✓	CAN COMM CIRCUIT (U1000)	CAN COMM CIRCUIT (U1001) ✓
ABS	NG	UNKWN	UNKWN	–	–	CAN COMM CIRCUIT (U1000)	–
ALL MODE AWD/4WD	NG	UNKWN	–	–	UNKWN	CAN COMM CIRCUIT (U1000) ✓	–

PKIC3750E

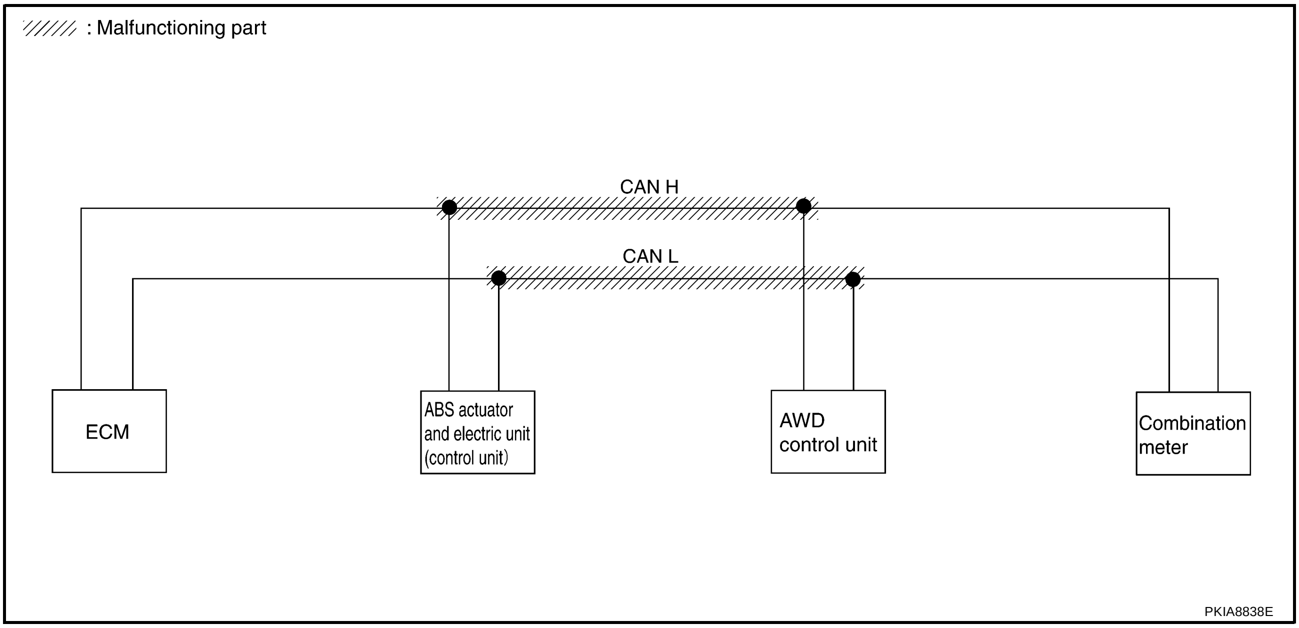

Case 2

Check ECM circuit. Refer to LAN-74, "ECM Circuit Inspection for M/T Model" .

SELECT SYSTEM screen	CAN DIAG SUPPORT MNTR					SELF-DIAG RESULTS	
	Initial diagnosis	Transmit diagnosis	Receive diagnosis				
			ECM	VDC/TCS /ABS	METER /M&A		
ENGINE	NG	UNKWN ✓	–	–	UNKWN ✓	CAN COMM CIRCUIT (U1000)	CAN COMM CIRCUIT (U1001) ✓
ABS	NG ✓	UNKWN ✓	UNKWN ✓	–	–	CAN COMM CIRCUIT (U1000) ✓	–
ALL MODE AWD/4WD	NG	UNKWN	UNKWN ✓	UNKWN	UNKWN	CAN COMM CIRCUIT (U1000) ✓	–

PKIC3751E

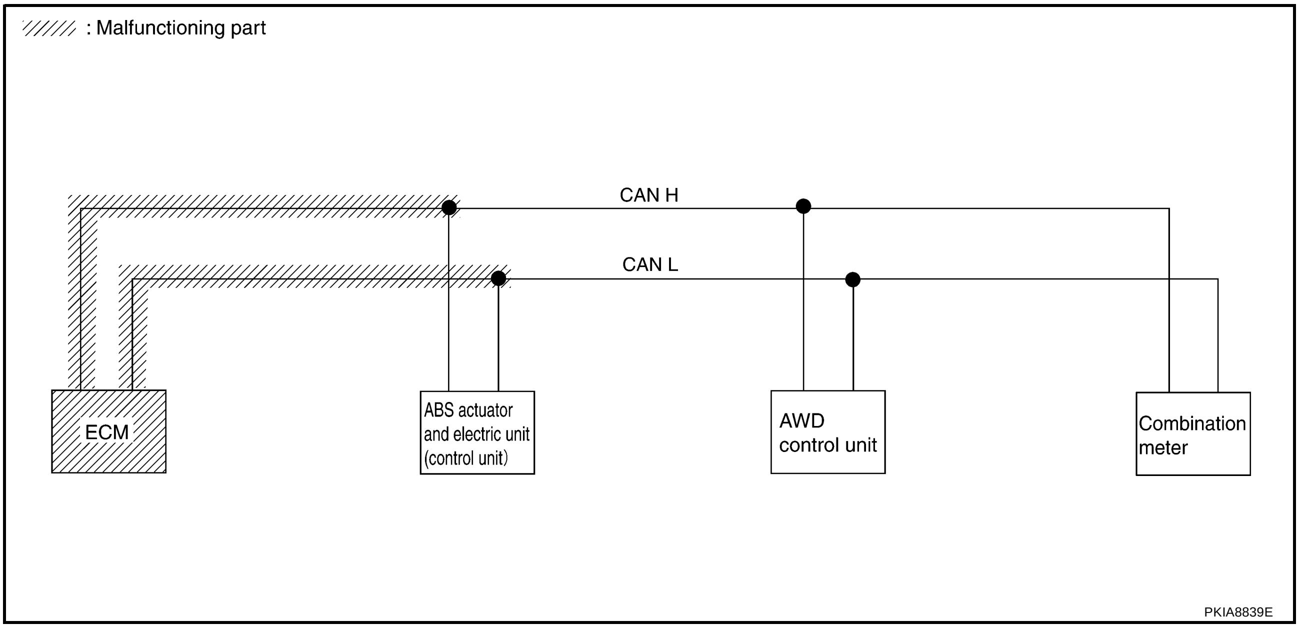

PKIA8839E

Case 3

Check ABS actuator and electric unit (control unit) circuit. Refer to LAN-75, "ABS Actuator and Electric Unit (Control Unit) Circuit Inspection" .

SELECT SYSTEM screen	CAN DIAG SUPPORT MNTR					SELF-DIAG RESULTS	
	Initial diagnosis	Transmit diagnosis	Receive diagnosis				
			ECM	VDC/TCS /ABS	METER /M&A		
ENGINE	NG	UNKWN	–	–	UNKWN	CAN COMM CIRCUIT (U1000)	CAN COMM CIRCUIT (U1001)
ABS	NG ✓	UNKWN ✓	UNKWN ✓	–	–	CAN COMM CIRCUIT (U1000) ✓	–
ALL MODE AWD/4WD	NG	UNKWN	UNKWN	UNKWN ✓	UNKWN	CAN COMM CIRCUIT (U1000) ✓	–

PKIC3752E

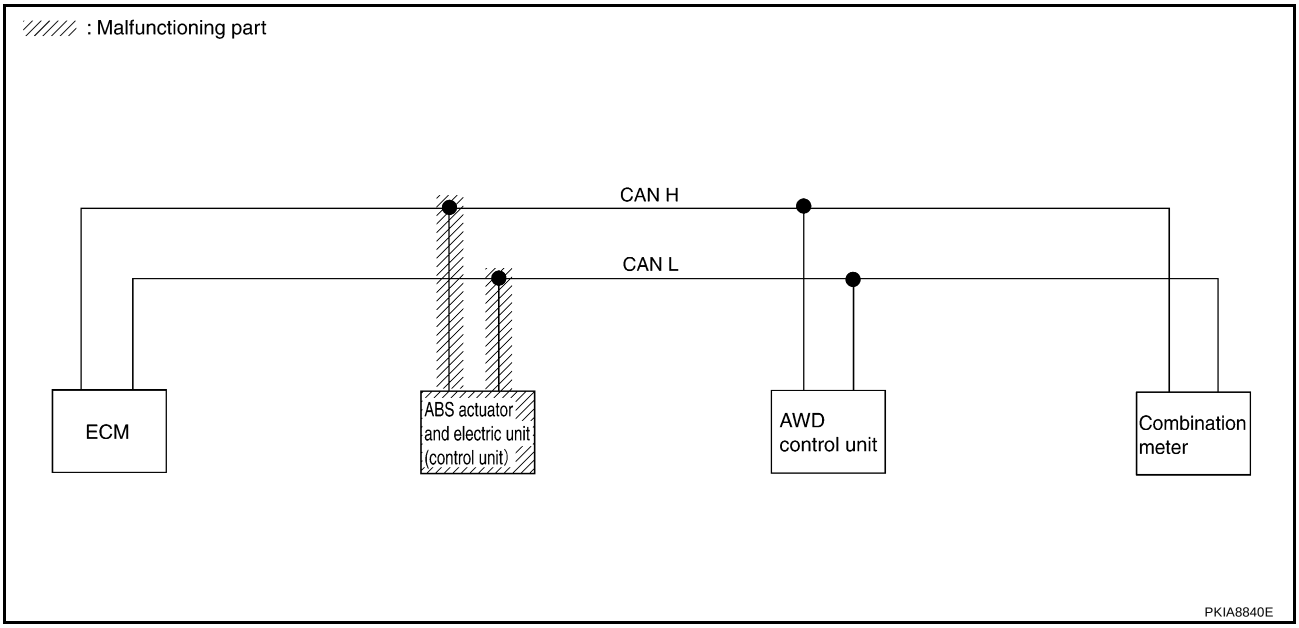

Case 4

Check AWD control unit circuit. Refer to LAN-77, "AWD Control Unit Circuit Inspection" .

SELECT SYSTEM screen	CAN DIAG SUPPORT MNTR					SELF-DIAG RESULTS	
	Initial diagnosis	Transmit diagnosis	Receive diagnosis				
			ECM	VDC/TCS /ABS	METER /M&A		
ENGINE	NG	UNKWN	—	—	UNKWN	CAN COMM CIRCUIT (U1000)	CAN COMM CIRCUIT (U1001)
ABS	NG	UNKWN	UNKWN	—	—	CAN COMM CIRCUIT (U1000)	—
ALL MODE AWD/4WD	NG	UNKWN ✓	—	—	—	CAN COMM CIRCUIT (U1000) ✓	—

PKIC3753E

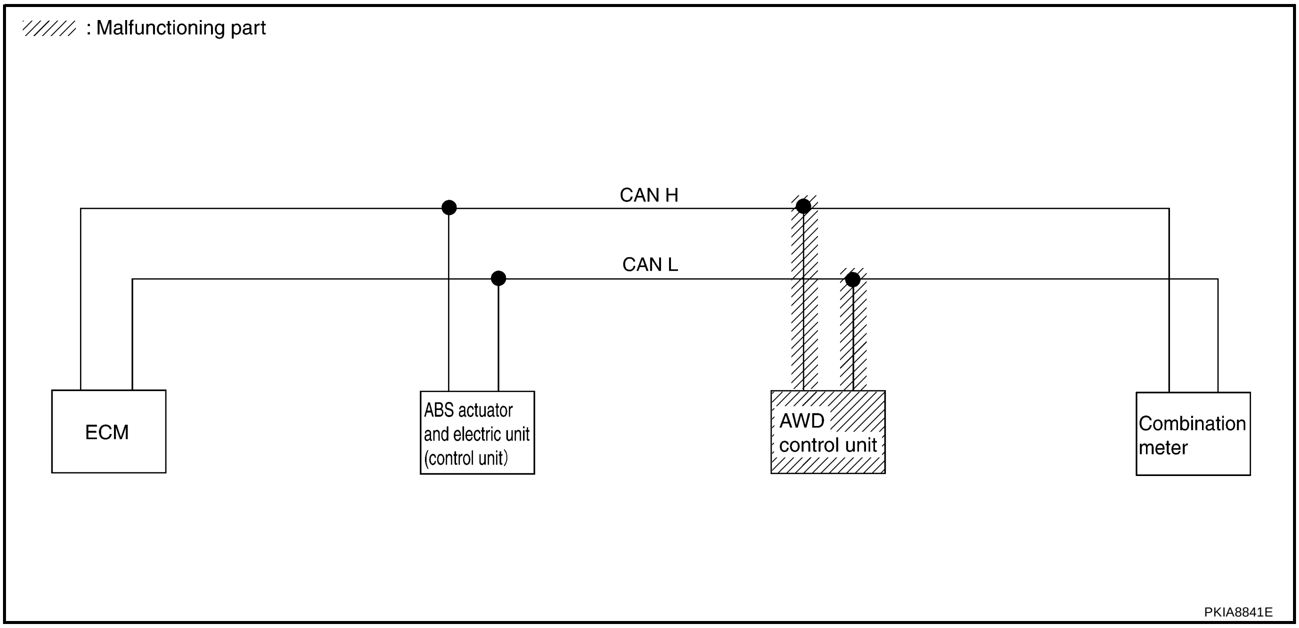

Case 5

Check combination meter circuit. Refer to LAN-78, "Combination Meter Circuit Inspection for AWD Model" .

SELECT SYSTEM screen	CAN DIAG SUPPORT MNTR					SELF-DIAG RESULTS	
	Initial diagnosis	Transmit diagnosis	Receive diagnosis				
			ECM	VDC/TCS /ABS	METER /M&A		
ENGINE	NG	UNKWN	–	–	UNKWN ✓	CAN COMM CIRCUIT (U1000)	CAN COMM CIRCUIT (U1001) ✓
ABS	NG	UNKWN	UNKWN	–	–	CAN COMM CIRCUIT (U1000)	–
ALL MODE AWD/4WD	NG	UNKWN	UNKWN	UNKWN	UNKWN ✓	CAN COMM CIRCUIT (U1000) ✓	–

PKIC3754E

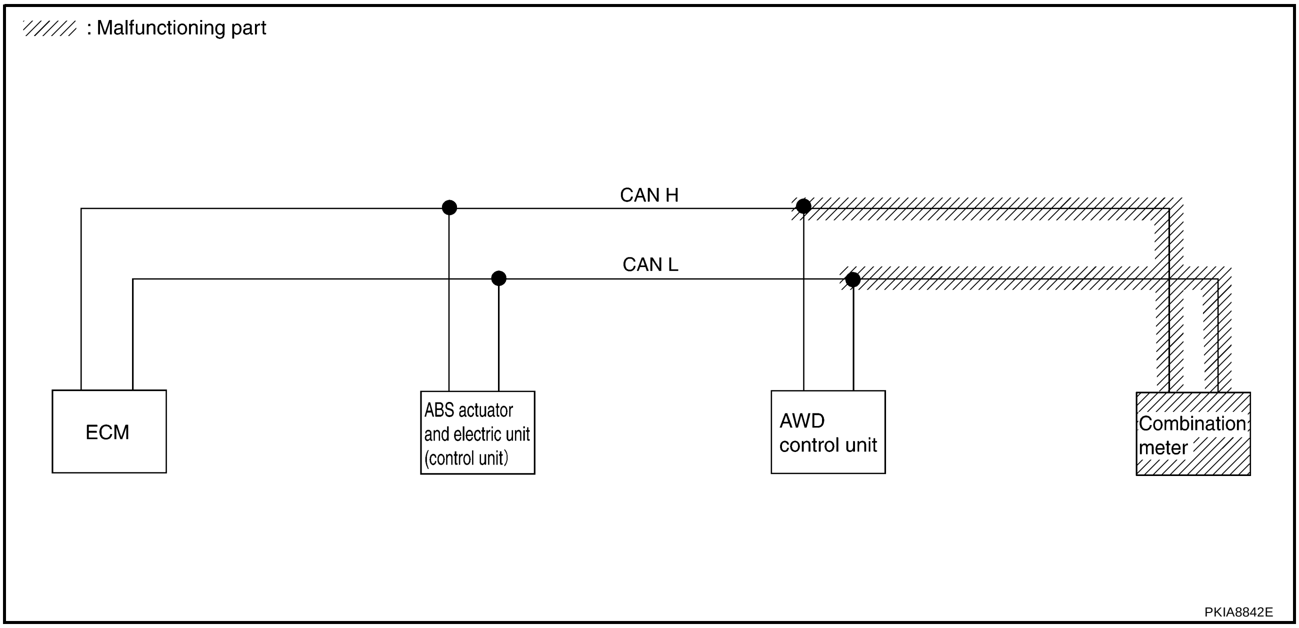

Case 6

Check CAN communication circuit. Refer to LAN-79, "CAN Communication Circuit Inspection" .

SELECT SYSTEM screen	CAN DIAG SUPPORT MNTR					SELF-DIAG RESULTS	
	Initial diagnosis	Transmit diagnosis	Receive diagnosis				
			ECM	VDC/TCS /ABS	METER /M&A		
ENGINE	NG	UNKWN	–	–	UNKWN ✓	CAN COMM CIRCUIT (U1000)	CAN COMM CIRCUIT (U1001) ✓
ABS	NG ✓	UNKWN ✓	UNKWN ✓	–	–	CAN COMM CIRCUIT (U1000) ✓	–
ALL MODE AWD/4WD	NG	UNKWN ✓	–	–	–	CAN COMM CIRCUIT (U1000) ✓	–

PKIC3755E

CAN SYSTEM (TYPE 3)
PFP:23710

Component Parts and Harness Connector Location
AKS00FCI

Refer to LAN-16, "Component Parts and Harness Connector Location" .

Schematic
AKS00FCJ

Refer to LAN-17, "Schematic" .

Wiring Diagram — CAN —
AKS00FCK

Refer to LAN-18, "Wiring Diagram — CAN —" .

Check Sheet

AKS00BKQ

NOTE:

If a check mark is put on “NG” on “INITIAL DIAG (Initial diagnosis)”, replace the control unit.

Check sheet table

SELECT SYSTEM screen	CAN DIAG SUPPORT MNTR						SELF-DIAG RESULTS	
	Initial diagnosis	Transmit diagnosis	Receive diagnosis					
			ECM	TCM	VDC/TCS /ABS	METER /M&A		
ENGINE	NG	UNKWN	–	UNKWN	–	UNKWN	CAN COMM CIRCUIT (U1000)	CAN COMM CIRCUIT (U1001)
A/T	NG	UNKWN	UNKWN	–	–	UNKWN	CAN COMM CIRCUIT (U1000)	–
ABS	NG	UNKWN	UNKWN	–	–	–	CAN COMM CIRCUIT (U1000)	–
ALL MODE AWD/4WD	NG	UNKWN	UNKWN	–	UNKWN	UNKWN	CAN COMM CIRCUIT (U1000)	–

Symptoms :

Attach copy of ENGINE SELF-DIAG RESULTS	Attach copy of A/T SELF-DIAG RESULTS	Attach copy of ABS SELF-DIAG RESULTS	Attach copy of ALL MODE AWD/4WD SELF-DIAG RESULTS
Attach copy of ENGINE CAN DIAG SUPPORT MNTR	Attach copy of A/T CAN DIAG SUPPORT MNTR	Attach copy of ABS CAN DIAG SUPPORT MNTR	Attach copy of ALL MODE AWD/4WD CAN DIAG SUPPORT MNTR

PKIC3741E

CHECK SHEET RESULTS (EXAMPLE)

NOTE:

If a check mark is put on “NG” on “INITIAL DIAG (Initial diagnosis)”, replace the control unit.

Case 1

Check harness between TCM and ABS actuator and electric unit (control unit). Refer to LAN-69, "Inspection Between TCM and ABS Actuator and Electric Unit (Control Unit) Circuit for AWD Model" .

SELECT SYSTEM screen	CAN DIAG SUPPORT MNTR						SELF-DIAG RESULTS	
	Initial diagnosis	Transmit diagnosis	Receive diagnosis					
			ECM	TCM	VDC/TCS /ABS	METER /M&A		
ENGINE	NG	UNKWN	–	UNKWN	–	UNKWN	CAN COMM CIRCUIT (U1000)	CAN COMM CIRCUIT (U1001)
A/T	NG	UNKWN	UNKWN	–	–	UNKWN	CAN COMM CIRCUIT (U1000)	–
ABS	NG	UNKWN	UNKWN	–	–	–	CAN COMM CIRCUIT (U1000)	–
ALL MODE AWD/4WD	NG	UNKWN	UNKWN	–	UNKWN	UNKWN	CAN COMM CIRCUIT (U1000)	–

PKIC3756E

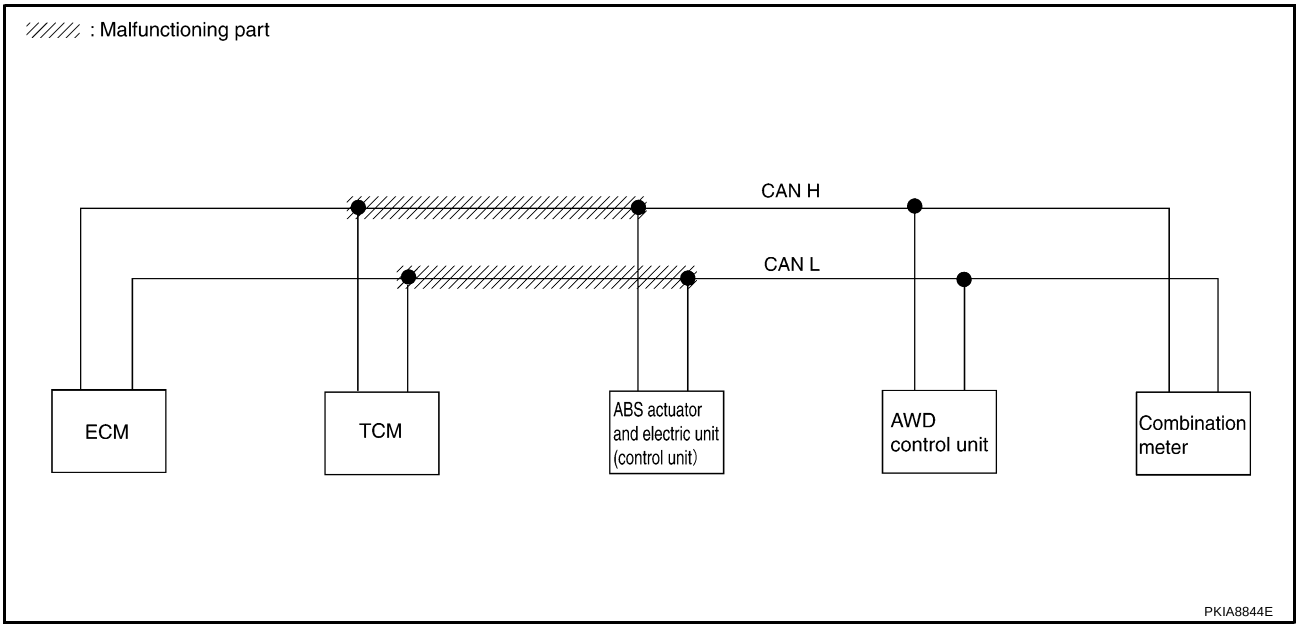

Case 2

Check harness between ABS actuator and electric unit (control unit) and AWD control unit. Refer to LAN-72, "Inspection Between ABS Actuator and Electric Unit (Control Unit) and AWD Control Unit Circuit" .

SELECT SYSTEM screen	CAN DIAG SUPPORT MNTR						SELF-DIAG RESULTS	
	Initial diagnosis	Transmit diagnosis	Receive diagnosis					
			ECM	TCM	VDC/TCS /ABS	METER /M&A		
ENGINE	NG	UNKWN	–	UNKWN	–	UNKWN ✓	CAN COMM CIRCUIT (U1000)	CAN COMM CIRCUIT (U1001) ✓
A/T	NG	UNKWN	UNKWN	–	–	UNKWN ✓	CAN COMM CIRCUIT (U1000) ✓	–
ABS	NG	UNKWN	UNKWN	–	–	–	CAN COMM CIRCUIT (U1000)	–
ALL MODE AWD/4WD	NG	UNKWN	–	–	–	UNKWN	CAN COMM CIRCUIT (U1000) ✓	–

PKIC3757E

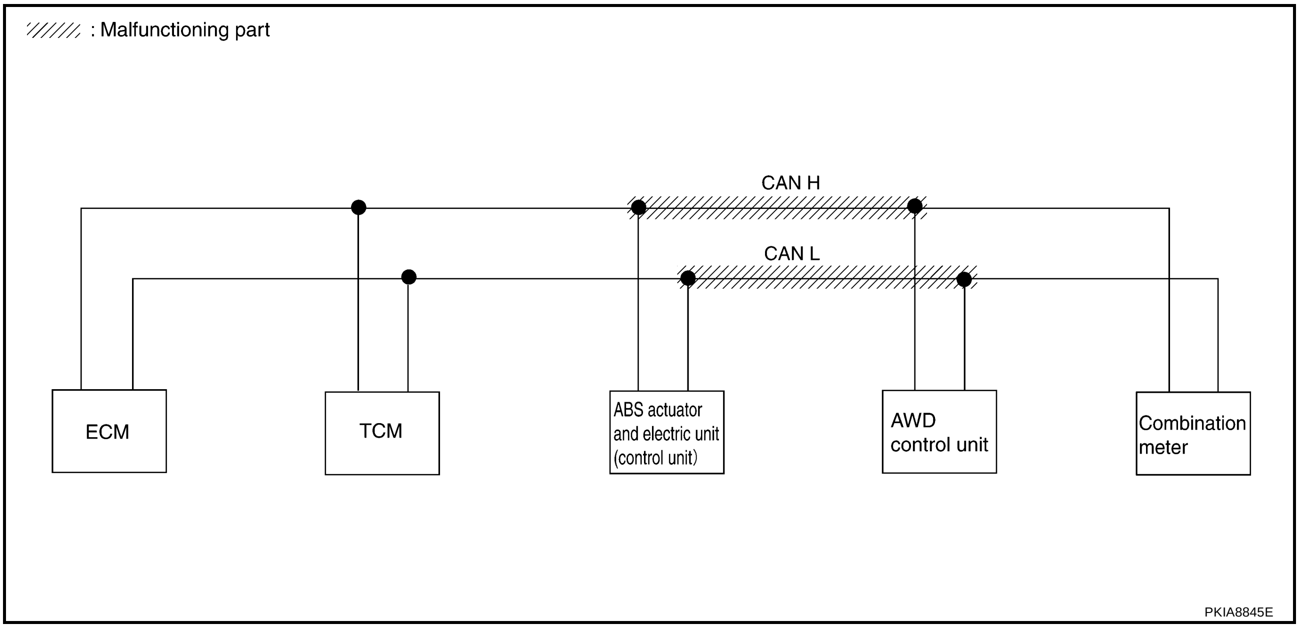

Case 3

Check ECM circuit. Refer to LAN-74, "ECM Circuit Inspection for A/T Model" .

SELECT SYSTEM screen	CAN DIAG SUPPORT MNTR						SELF-DIAG RESULTS	
	Initial diagnosis	Transmit diagnosis	Receive diagnosis					
			ECM	TCM	VDC/TCS /ABS	METER /M&A		
ENGINE	NG	UNKWN ✓	–	UNKWN ✓	–	UNKWN ✓	CAN COMM CIRCUIT (U1000) ✓	CAN COMM CIRCUIT (U1001) ✓
A/T	NG	UNKWN	UNKWN ✓	–	–	UNKWN	CAN COMM CIRCUIT (U1000) ✓	–
ABS	NG ✓	UNKWN ✓	UNKWN ✓	–	–	–	CAN COMM CIRCUIT (U1000) ✓	–
ALL MODE AWD/4WD	NG	UNKWN	UNKWN ✓	–	UNKWN	UNKWN	CAN COMM CIRCUIT (U1000) ✓	–

PKIC3758E

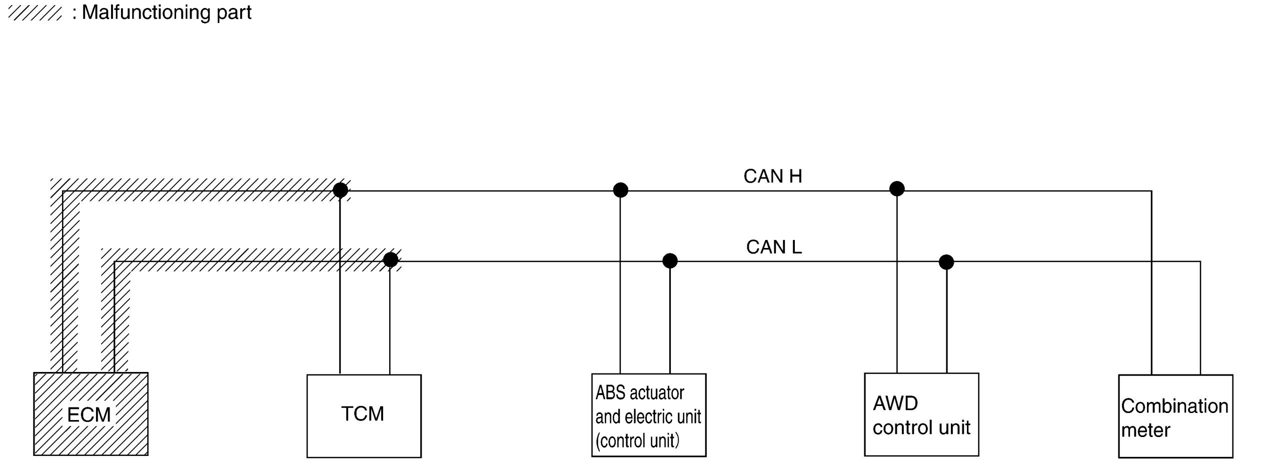

PKIA8846E

Case 4

Check TCM circuit. Refer to LAN-75, "TCM Circuit Inspection" .

SELECT SYSTEM screen	CAN DIAG SUPPORT MNTR						SELF-DIAG RESULTS	
	Initial diagnosis	Transmit diagnosis	Receive diagnosis					
			ECM	TCM	VDC/TCS /ABS	METER /M&A		
ENGINE	NG	UNKWN	–	UNKWN ✓	–	UNKWN	CAN COMM CIRCUIT (U1000) ✓	CAN COMM CIRCUIT (U1001) ✓
A/T	NG	UNKWN ✓	UNKWN ✓	–	–	UNKWN ✓	CAN COMM CIRCUIT (U1000) ✓	–
ABS	NG	UNKWN	UNKWN	–	–	–	CAN COMM CIRCUIT (U1000)	–
ALL MODE AWD/4WD	NG	UNKWN	UNKWN	–	UNKWN	UNKWN	CAN COMM CIRCUIT (U1000)	–

PKIC3759E

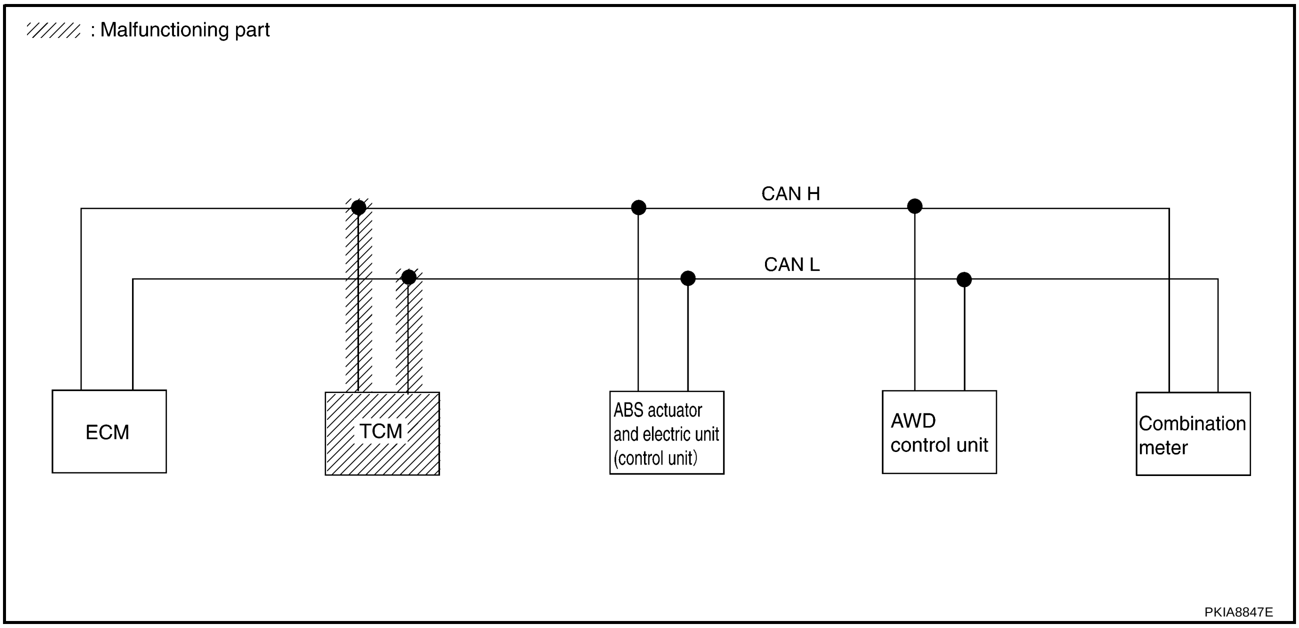

Case 5

Check ABS actuator and electric unit (control unit) circuit. Refer to LAN-75, "ABS Actuator and Electric Unit (Control Unit) Circuit Inspection" .

SELECT SYSTEM screen	CAN DIAG SUPPORT MNTR						SELF-DIAG RESULTS	
	Initial diagnosis	Transmit diagnosis	Receive diagnosis					
			ECM	TCM	VDC/TCS /ABS	METER /M&A		
ENGINE	NG	UNKWN	—	UNKWN	—	UNKWN	CAN COMM CIRCUIT (U1000)	CAN COMM CIRCUIT (U1001)
A/T	NG	UNKWN	UNKWN	—	—	UNKWN	CAN COMM CIRCUIT (U1000)	—
ABS	NG ✓	UNKWN ✓	UNKWN ✓	—	—	—	CAN COMM CIRCUIT (U1000) ✓	—
ALL MODE AWD/4WD	NG	UNKWN	UNKWN	—	UNKWN ✓	UNKWN	CAN COMM CIRCUIT (U1000) ✓	—

PKIC3760E

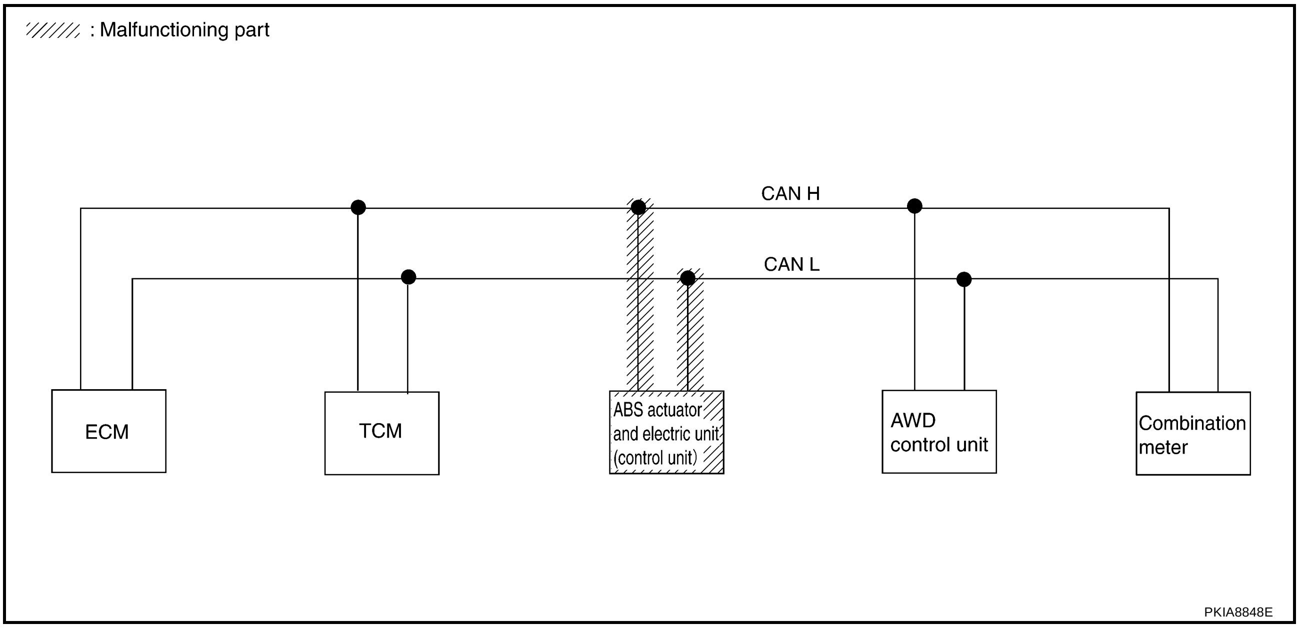

Case 6

Check AWD control unit circuit. Refer to LAN-77, "AWD Control Unit Circuit Inspection" .

SELECT SYSTEM screen	CAN DIAG SUPPORT MNTR						SELF-DIAG RESULTS	
	Initial diagnosis	Transmit diagnosis	Receive diagnosis					
			ECM	TCM	VDC/TCS /ABS	METER /M&A		
ENGINE	NG	UNKWN	—	UNKWN	—	UNKWN	CAN COMM CIRCUIT (U1000)	CAN COMM CIRCUIT (U1001)
A/T	NG	UNKWN	UNKWN	—	—	UNKWN	CAN COMM CIRCUIT (U1000)	—
ABS	NG	UNKWN	UNKWN	—	—	—	CAN COMM CIRCUIT (U1000)	—
ALL MODE AWD/4WD	NG	UNKWN ✓	—	—	—	—	CAN COMM CIRCUIT (U1000) ✓	—

PKIC3761E

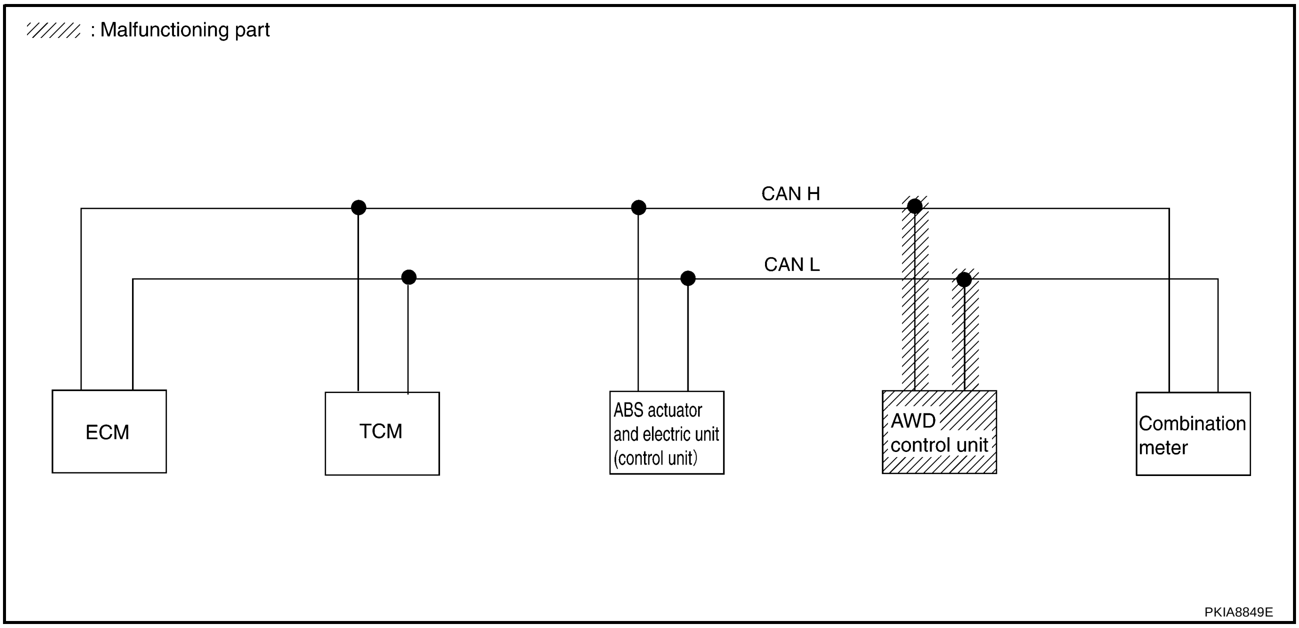

Case 7

Check combination meter circuit. Refer to LAN-78, "Combination Meter Circuit Inspection for AWD Model" .

SELECT SYSTEM screen	CAN DIAG SUPPORT MNTR						SELF-DIAG RESULTS	
	Initial diagnosis	Transmit diagnosis	Receive diagnosis					
			ECM	TCM	VDC/TCS /ABS	METER /M&A		
ENGINE	NG	UNKWN	–	UNKWN	–	UNKWN (✓)	CAN COMM CIRCUIT (U1000)	CAN COMM CIRCUIT (U1001) (✓)
A/T	NG	UNKWN	UNKWN	–	–	UNKWN (✓)	CAN COMM CIRCUIT (U1000) (✓)	–
ABS	NG	UNKWN	UNKWN	–	–	–	CAN COMM CIRCUIT (U1000)	–
ALL MODE AWD/4WD	NG	UNKWN	UNKWN	–	UNKWN	UNKWN (✓)	CAN COMM CIRCUIT (U1000) (✓)	–

PKIC3762E

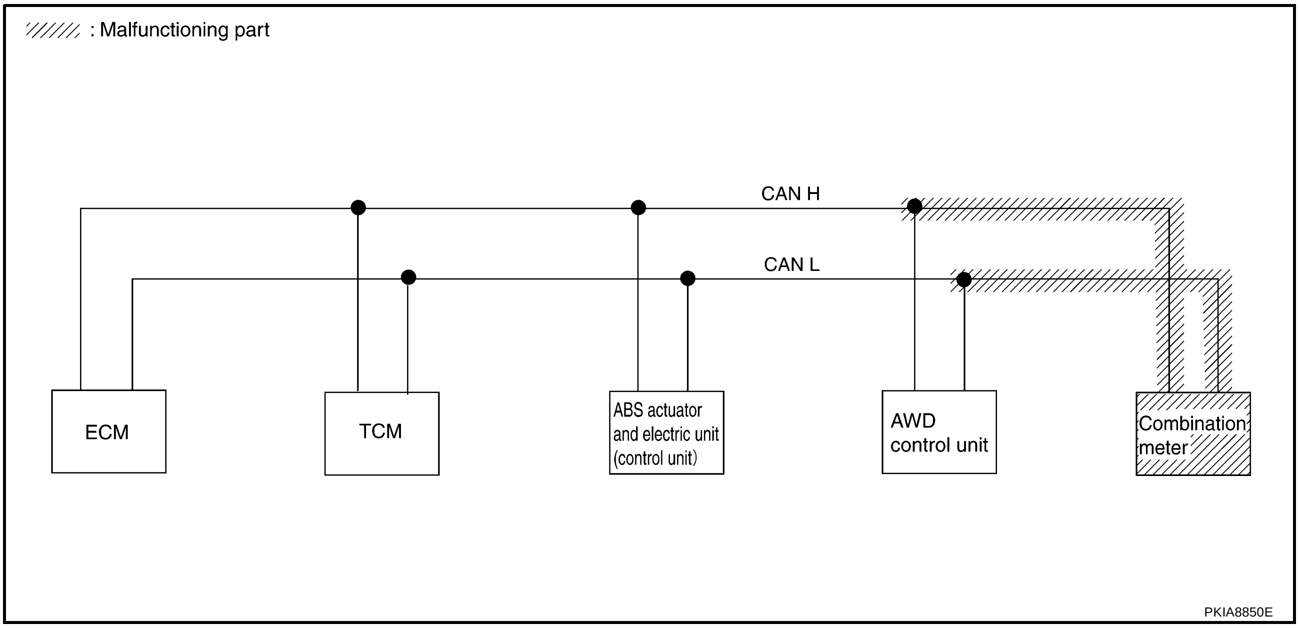

Case 8

Check CAN communication circuit. Refer to LAN-79, "CAN Communication Circuit Inspection" .

SELECT SYSTEM screen	CAN DIAG SUPPORT MNTR						SELF-DIAG RESULTS	
	Initial diagnosis	Transmit diagnosis	Receive diagnosis					
			ECM	TCM	VDC/TCS /ABS	METER /M&A		
ENGINE	NG	UNKWN	–	UNKWN (✓)	–	UNKWN (✓)	CAN COMM CIRCUIT (U1000) (✓)	CAN COMM CIRCUIT (U1001) (✓)
A/T	NG	UNKWN (✓)	UNKWN (✓)	–	–	UNKWN (✓)	CAN COMM CIRCUIT (U1000) (✓)	–
ABS	NG (✓)	UNKWN (✓)	UNKWN (✓)	–	–	–	CAN COMM CIRCUIT (U1000) (✓)	–
ALL MODE AWD/4WD	NG	UNKWN (✓)	–	–	–	–	CAN COMM CIRCUIT (U1000) (✓)	–

PKIC3763E

CAN SYSTEM (TYPE 4)

PFP:23710

Component Parts and Harness Connector Location

AKS00FCL

Refer to LAN-16, "Component Parts and Harness Connector Location" .

Schematic

AKS00FCM

Refer to LAN-17, "Schematic" .

Wiring Diagram — CAN —

AKS00FCN

Refer to LAN-18, "Wiring Diagram — CAN —" .

Check Sheet

AKS00BL3

NOTE:

If a check mark is put on “NG” on “INITIAL DIAG (Initial diagnosis)”, replace the control unit.

Check sheet table

SELECT SYSTEM screen	CAN DIAG SUPPORT MNTR							SELF-DIAG RESULTS	
	Initial diagnosis	Transmit diagnosis	Receive diagnosis						
			ECM	VDC/TCS /ABS	STRG	AWD /4WD	METER /M&A		
ENGINE	NG	UNKWN	—	UNKWN	—	—	UNKWN	CAN COMM CIRCUIT (U1000)	CAN COMM CIRCUIT (U1001)
ABS	NG	UNKWN	UNKWN	—	UNKWN	UNKWN	—	CAN COMM CIRCUIT (U1000)	—
ALL MODE AWD/4WD	NG	UNKWN	UNKWN	UNKWN	—	—	UNKWN	CAN COMM CIRCUIT (U1000)	—

Symptoms :

Attach copy of ENGINE SELF-DIAG RESULTS

Attach copy of ABS SELF-DIAG RESULTS

Attach copy of ALL MODE AWD/4WD SELF-DIAG RESULTS

Attach copy of ENGINE CAN DIAG SUPPORT MNTR

Attach copy of ABS CAN DIAG SUPPORT MNTR

Attach copy of ALL MODE AWD/4WD CAN DIAG SUPPORT MNTR

PKIC3742E

CHECK SHEET RESULTS (EXAMPLE)

NOTE:

If a check mark is put on “NG” on “INITIAL DIAG (Initial diagnosis)”, replace the control unit.

Case 1

Check harness between VDC/TCS/ABS control unit and AWD control unit. Refer to LAN-73, "Inspection Between VDC/TCS/ABS Control Unit and AWD Control Unit Circuit" .

SELECT SYSTEM screen	CAN DIAG SUPPORT MNTR							SELF-DIAG RESULTS	
	Initial diagnosis	Transmit diagnosis	Receive diagnosis						
			ECM	VDC/TCS /ABS	STRG	AWD /4WD	METER /M&A		
ENGINE	NG	UNKWN	–	UNKWN	–	–	UNKWN ✓	CAN COMM CIRCUIT (U1000)	CAN COMM CIRCUIT (U1001) ✓
ABS	NG	UNKWN	UNKWN	–	UNKWN ✓	UNKWN ✓	–	CAN COMM CIRCUIT (U1000) ✓	–
ALL MODE AWD/4WD	NG	UNKWN	–	–	–	–	UNKWN	CAN COMM CIRCUIT (U1000) ✓	–

PKIC3764E

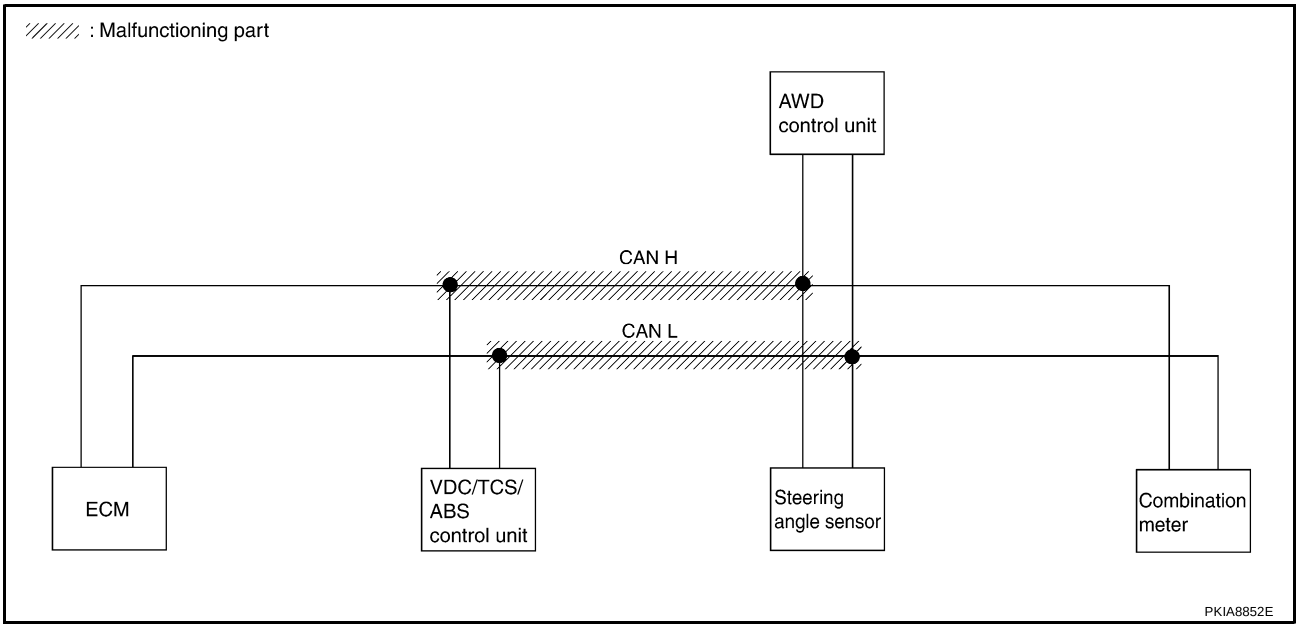

Case 2

Check ECM circuit. Refer to LAN-74, "ECM Circuit Inspection for M/T Model" .

SELECT SYSTEM screen	CAN DIAG SUPPORT MNTR							SELF-DIAG RESULTS	
	Initial diagnosis	Transmit diagnosis	Receive diagnosis						
			ECM	VDC/TCS /ABS	STRG	AWD /4WD	METER /M&A		
ENGINE	NG	UNKWN ✓	–	UNKWN ✓	–	–	UNKWN ✓	CAN COMM CIRCUIT (U1000)	CAN COMM CIRCUIT (U1001) ✓
ABS	NG	UNKWN	UNKWN ✓	–	UNKWN	UNKWN	–	CAN COMM CIRCUIT (U1000) ✓	–
ALL MODE AWD/4WD	NG	UNKWN	UNKWN ✓	UNKWN	–	–	UNKWN	CAN COMM CIRCUIT (U1000) ✓	–

PKIC3765E

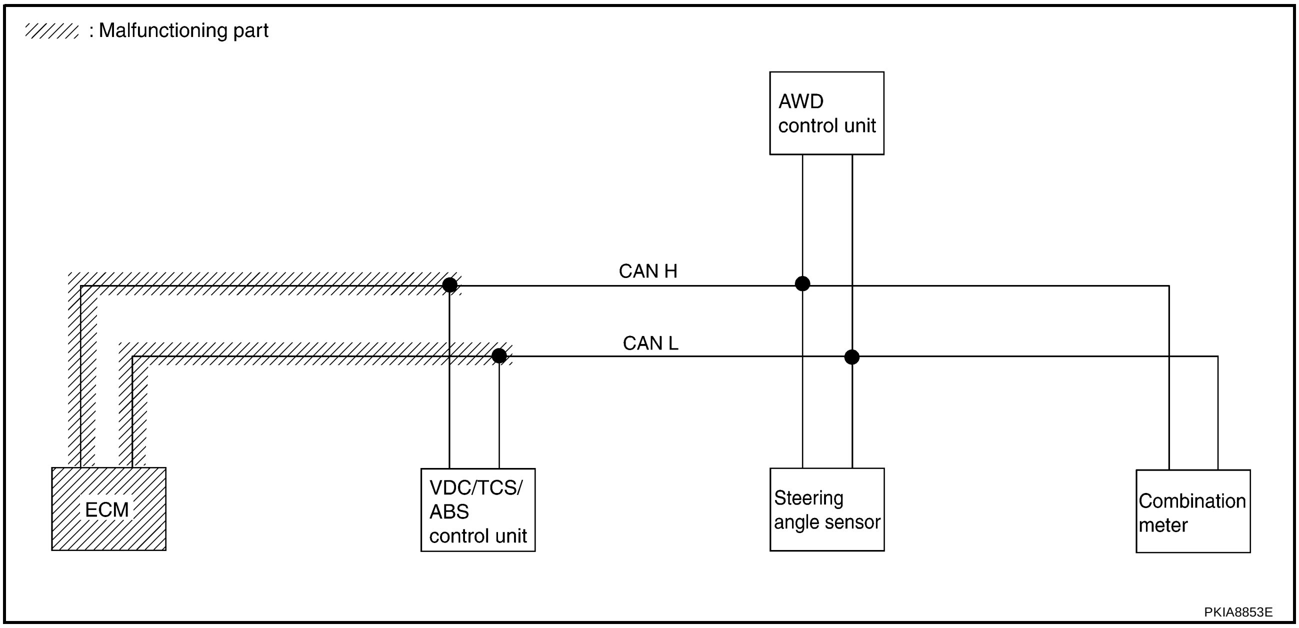

Case 3

Check VDC/TCS/ABS control unit circuit. Refer to LAN-76, "VDC/TCS/ABS Control Unit Circuit Inspection" .

SELECT SYSTEM screen	CAN DIAG SUPPORT MNTR							SELF-DIAG RESULTS	
	Initial diagnosis	Transmit diagnosis	Receive diagnosis						
			ECM	VDC/TCS /ABS	STRG	AWD /4WD	METER /M&A		
ENGINE	NG	UNKWN	–	UNKWN ✓	–	–	UNKWN	CAN COMM CIRCUIT (U1000)	CAN COMM CIRCUIT (U1001) ✓
ABS	NG ✓	UNKWN ✓	UNKWN ✓	–	UNKWN ✓	UNKWN ✓	–	CAN COMM CIRCUIT (U1000) ✓	–
ALL MODE AWD/4WD	NG	UNKWN	UNKWN	UNKWN ✓	–	–	UNKWN	CAN COMM CIRCUIT (U1000) ✓	–

PKIC3766E

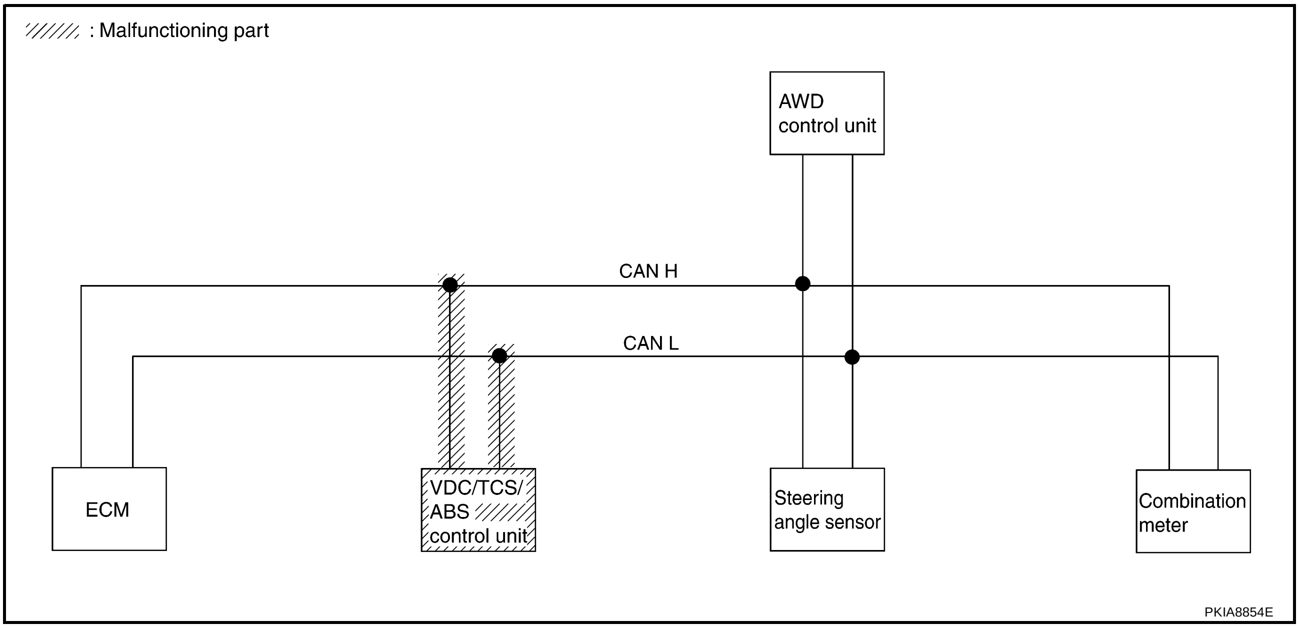

Case 4

Check steering angle sensor circuit. Refer to LAN-76, "Steering Angle Sensor Circuit Inspection" .

SELECT SYSTEM screen	CAN DIAG SUPPORT MNTR							SELF-DIAG RESULTS	
	Initial diagnosis	Transmit diagnosis	Receive diagnosis						
			ECM	VDC/TCS /ABS	STRG	AWD /4WD	METER /M&A		
ENGINE	NG	UNKWN	–	UNKWN	–	–	UNKWN	CAN COMM CIRCUIT (U1000)	CAN COMM CIRCUIT (U1001)
ABS	NG	UNKWN	UNKWN	–	UNKWN ✓	UNKWN	–	CAN COMM CIRCUIT (U1000) ✓	–
ALL MODE AWD/4WD	NG	UNKWN	UNKWN	UNKWN	–	–	UNKWN	CAN COMM CIRCUIT (U1000)	–

PKIC3767E

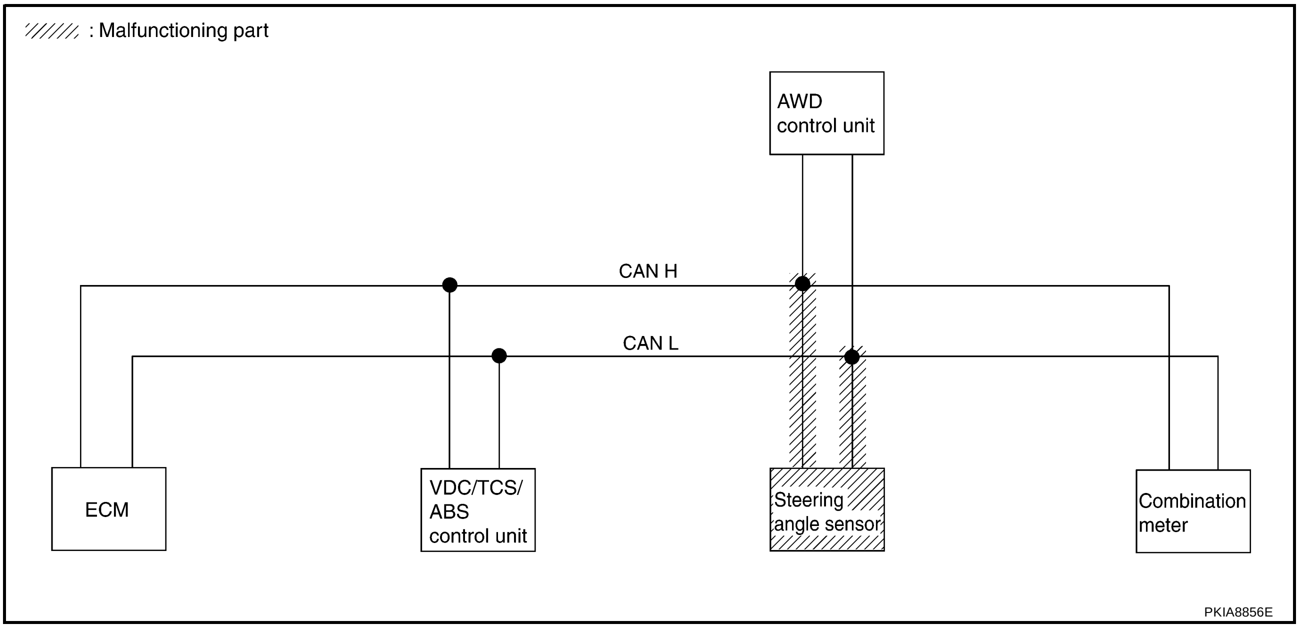

Case 5

Check AWD control unit circuit. Refer to LAN-77, "AWD Control Unit Circuit Inspection" .

SELECT SYSTEM screen	CAN DIAG SUPPORT MNTR							SELF-DIAG RESULTS	
	Initial diagnosis	Transmit diagnosis	Receive diagnosis						
			ECM	VDC/TCS /ABS	STRG	AWD /4WD	METER /M&A		
ENGINE	NG	UNKWN	–	UNKWN	–	–	UNKWN	CAN COMM CIRCUIT (U1000)	CAN COMM CIRCUIT (U1001)
ABS	NG	UNKWN	UNKWN	–	UNKWN	UNKWN ✓	–	CAN COMM CIRCUIT (U1000) ✓	–
ALL MODE AWD/4WD	NG	UNKWN ✓	–	–	–	–	–	CAN COMM CIRCUIT (U1000) ✓	–

PKIC3768E

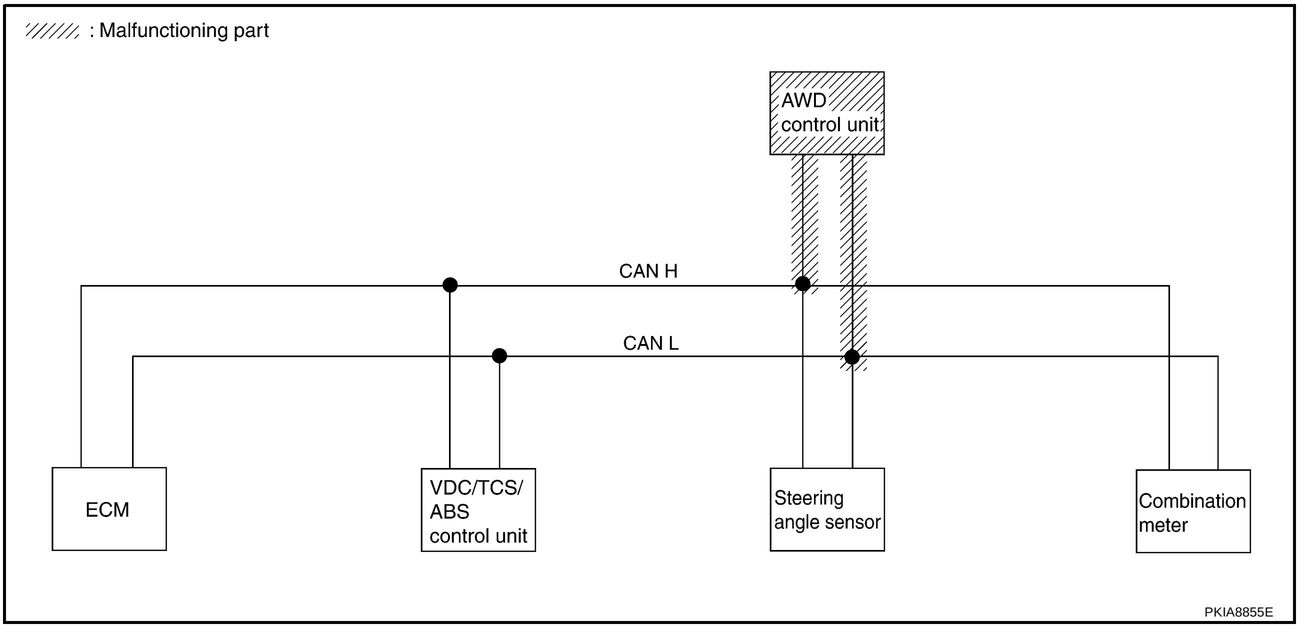

Case 6

Check combination meter circuit. Refer to LAN-78, "Combination Meter Circuit Inspection for AWD Model" .

SELECT SYSTEM screen	CAN DIAG SUPPORT MNTR							SELF-DIAG RESULTS	
	Initial diagnosis	Transmit diagnosis	Receive diagnosis						
			ECM	VDC/TCS /ABS	STRG	AWD /4WD	METER /M&A		
ENGINE	NG	UNKWN	–	UNKWN	–	–	UNKWN ✓	CAN COMM CIRCUIT (U1000)	CAN COMM CIRCUIT (U1001) ✓
ABS	NG	UNKWN	UNKWN	–	UNKWN	UNKWN	–	CAN COMM CIRCUIT (U1000)	–
ALL MODE AWD/4WD	NG	UNKWN	UNKWN	UNKWN	–	–	UNKWN ✓	CAN COMM CIRCUIT (U1000) ✓	–

PKIC3769E

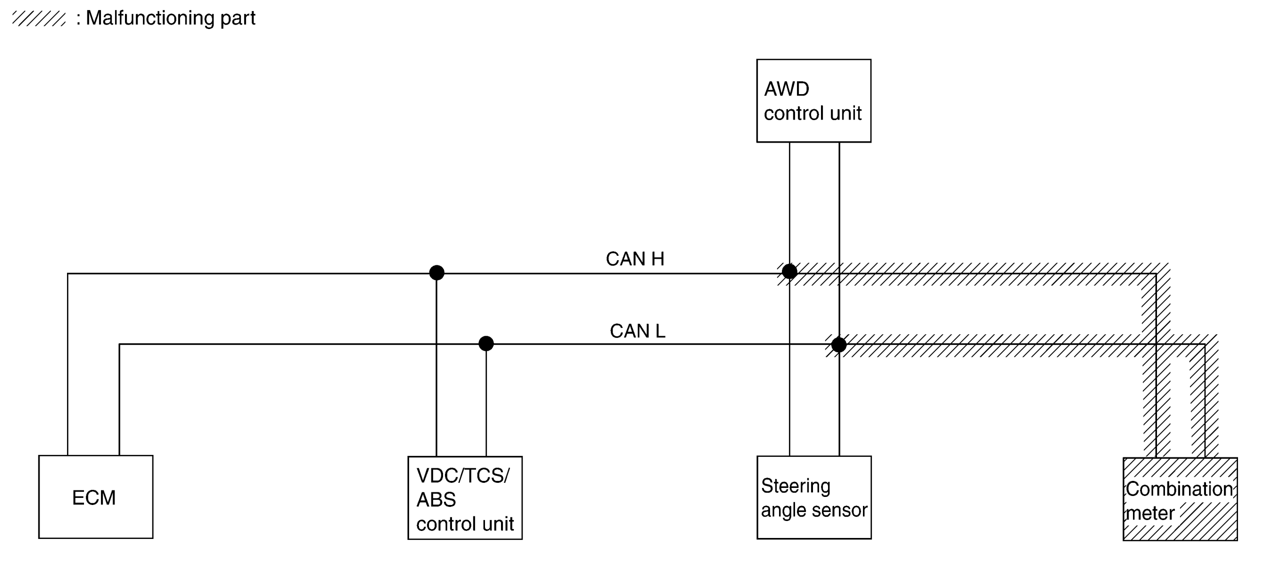

PKIA8857E

Case 7

Check CAN communication circuit. Refer to LAN-79, "CAN Communication Circuit Inspection" .

SELECT SYSTEM screen	CAN DIAG SUPPORT MNTR							SELF-DIAG RESULTS	
	Initial diagnosis	Transmit diagnosis	Receive diagnosis						
			ECM	VDC/TCS /ABS	STRG	AWD /4WD	METER /M&A		
ENGINE	NG	UNKWN	–	UNKWN ✓	–	–	UNKWN ✓	CAN COMM CIRCUIT (U1000)	CAN COMM CIRCUIT (U1001) ✓
ABS	NG ✓	UNKWN ✓	UNKWN ✓	–	UNKWN ✓	UNKWN ✓	–	CAN COMM CIRCUIT (U1000) ✓	–
ALL MODE AWD/4WD	NG	UNKWN ✓	–	–	–	–	–	CAN COMM CIRCUIT (U1000) ✓	–

PKIC3770E

CAN SYSTEM (TYPE 5)

PFP:23710

Component Parts and Harness Connector Location

AKS00FCO

Refer to LAN-16, "Component Parts and Harness Connector Location" .

Schematic

AKS00FCP

Refer to LAN-17, "Schematic" .

Wiring Diagram — CAN —

AKS00FCQ

Refer to LAN-18, "Wiring Diagram — CAN —" .

Check Sheet

AKS00BLF

NOTE:

If a check mark is put on “NG” on “INITIAL DIAG (Initial diagnosis)”, replace the control unit.

Check sheet table

SELECT SYSTEM screen	CAN DIAG SUPPORT MNTR								SELF-DIAG RESULTS	
	Initial diagnosis	Transmit diagnosis	Receive diagnosis							
			ECM	TCM	VDC/TCS /ABS	STRG	AWD /4WD	METER /M&A		
ENGINE	NG	UNKWN	–	UNKWN	UNKWN	–	–	UNKWN	CAN COMM CIRCUIT (U1000)	CAN COMM CIRCUIT (U1001)
A/T	NG	UNKWN	UNKWN	–	UNKWN	–	–	UNKWN	CAN COMM CIRCUIT (U1000)	–
ABS	NG	UNKWN	UNKWN	UNKWN	–	UNKWN	UNKWN	–	CAN COMM CIRCUIT (U1000)	–
ALL MODE AWD/4WD	NG	UNKWN	UNKWN	–	UNKWN	–	–	UNKWN	CAN COMM CIRCUIT (U1000)	–

Symptoms :

Attach copy of ENGINE SELF-DIAG RESULTS	Attach copy of A/T SELF-DIAG RESULTS	Attach copy of ABS SELF-DIAG RESULTS	Attach copy of ALL MODE AWD/4WD SELF-DIAG RESULTS
Attach copy of ENGINE CAN DIAG SUPPORT MNTR	Attach copy of A/T CAN DIAG SUPPORT MNTR	Attach copy of ABS CAN DIAG SUPPORT MNTR	Attach copy of ALL MODE AWD/4WD CAN DIAG SUPPORT MNTR

PKIC3743E

CHECK SHEET RESULTS (EXAMPLE)

NOTE:

If a check mark is put on “NG” on “INITIAL DIAG (Initial diagnosis)”, replace the control unit.

Case 1

Check harness between TCM and VDC/TCS/ABS control unit. Refer to LAN-70, "Inspection Between TCM and VDC/TCS/ABS Control Unit Circuit" .

SELECT SYSTEM screen	CAN DIAG SUPPORT MNTR								SELF-DIAG RESULTS	
	Initial diagnosis	Transmit diagnosis	Receive diagnosis							
			ECM	TCM	VDC/TCS /ABS	STRG	AWD /4WD	METER /M&A		
ENGINE	NG	UNKWN	–	UNKWN	UNKWN ✓	–	–	UNKWN ✓	CAN COMM CIRCUIT (U1000)	CAN COMM CIRCUIT (U1001) ✓
A/T	NG	UNKWN	UNKWN	–	UNKWN ✓	–	–	UNKWN ✓	CAN COMM CIRCUIT (U1000) ✓	–
ABS	NG	UNKWN	UNKWN ✓	UNKWN ✓	–	UNKWN	UNKWN	–	CAN COMM CIRCUIT (U1000) ✓	–
ALL MODE AWD/4WD	NG	UNKWN	UNKWN ✓	–	UNKWN	–	–	UNKWN	CAN COMM CIRCUIT (U1000) ✓	–

PKIC3771E

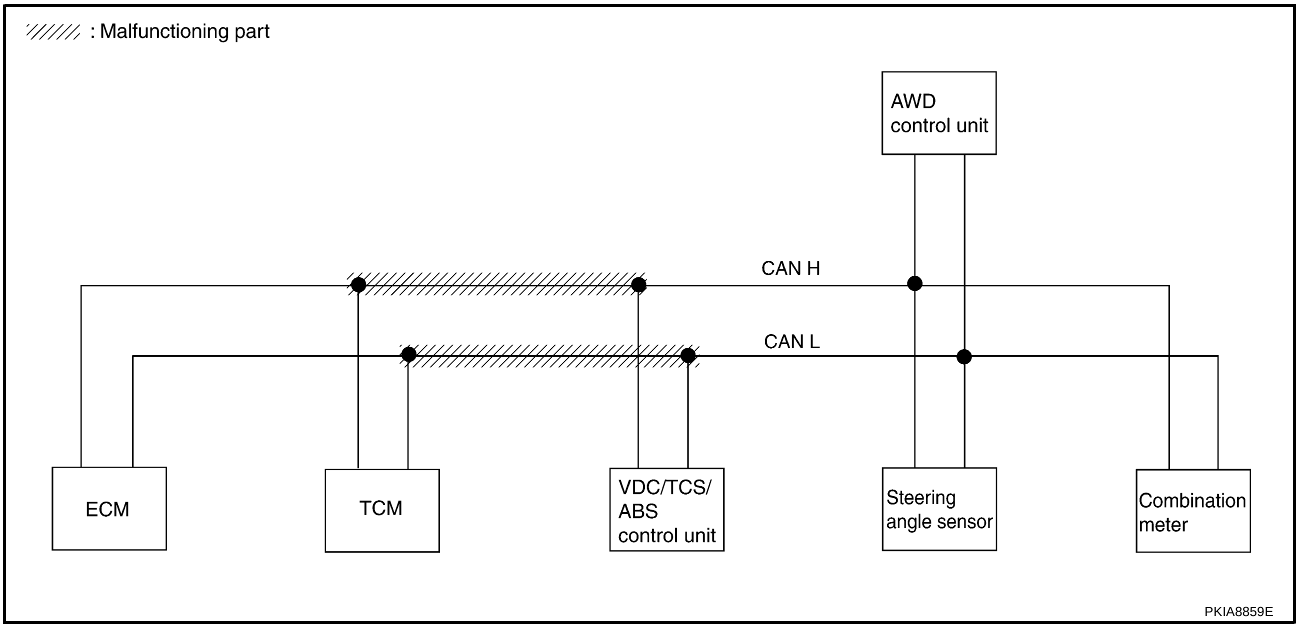

Case 2

Check harness between VDC/TCS/ABS control unit and AWD control unit. Refer to LAN-73, "Inspection Between VDC/TCS/ABS Control Unit and AWD Control Unit Circuit" .

SELECT SYSTEM screen	CAN DIAG SUPPORT MNTR									SELF-DIAG RESULTS	
	Initial diagnosis	Transmit diagnosis	Receive diagnosis								
			ECM	TCM	VDC/TCS /ABS	STRG	AWD /4WD	METER /M&A		
ENGINE	NG	UNKWN	—	UNKWN	UNKWN	—	—	UNKWN ✓	CAN COMM CIRCUIT (U1000)	CAN COMM CIRCUIT ✓ (U1001)
A/T	NG	UNKWN	UNKWN	—	UNKWN	—	—	UNKWN ✓	CAN COMM CIRCUIT ✓ (U1000)	—
ABS	NG	UNKWN	UNKWN	UNKWN	—	UNKWN ✓	UNKWN ✓	—	CAN COMM CIRCUIT ✓ (U1000)	—
ALL MODE AWD/4WD	NG	UNKWN	—	—	—	—	—	UNKWN	CAN COMM CIRCUIT ✓ (U1000)	—

PKIC3772E

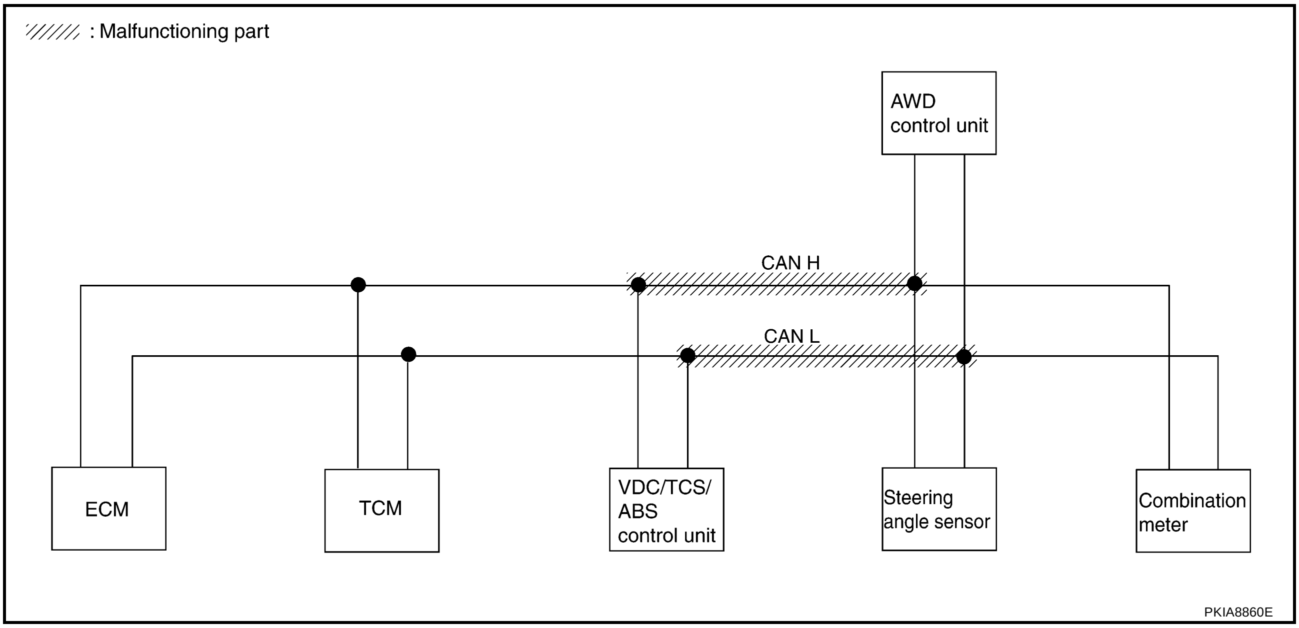

Case 3

Check ECM circuit. Refer to LAN-74, "ECM Circuit Inspection for A/T Model" .

SELECT SYSTEM screen	CAN DIAG SUPPORT MNTR								SELF-DIAG RESULTS	
	Initial diagnosis	Transmit diagnosis	Receive diagnosis							
			ECM	TCM	VDC/TCS /ABS	STRG	AWD /4WD	METER /M&A		
ENGINE	NG	UNKWN ✓	—	UNKWN ✓	UNKWN ✓	—	—	UNKWN ✓	CAN COMM CIRCUIT (U1000) ✓	CAN COMM CIRCUIT (U1001) ✓
A/T	NG	UNKWN	UNKWN ✓	—	UNKWN	—	—	UNKWN	CAN COMM CIRCUIT (U1000) ✓	—
ABS	NG	UNKWN	UNKWN ✓	UNKWN	—	UNKWN	UNKWN	—	CAN COMM CIRCUIT (U1000) ✓	—
ALL MODE AWD/4WD	NG	UNKWN	UNKWN ✓	—	UNKWN	—	—	UNKWN	CAN COMM CIRCUIT (U1000) ✓	—

PKIC3773E

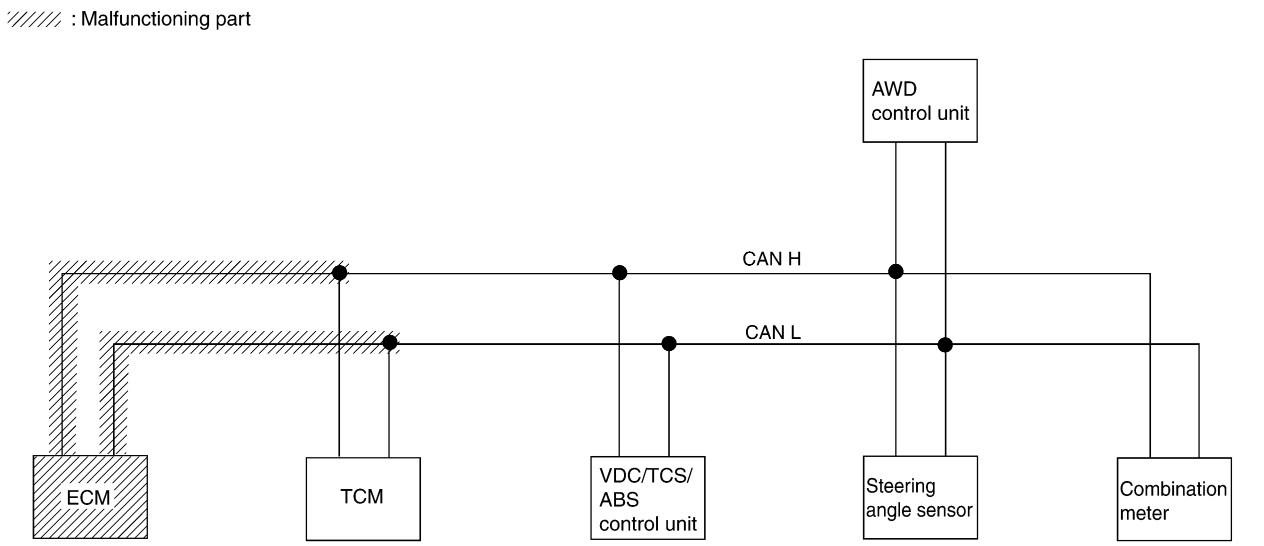

PKIA8861E

Case 4

Check TCM circuit. Refer to LAN-75, "TCM Circuit Inspection" .

SELECT SYSTEM screen	CAN DIAG SUPPORT MNTR								SELF-DIAG RESULTS	
	Initial diagnosis	Transmit diagnosis	Receive diagnosis							
			ECM	TCM	VDC/TCS /ABS	STRG	AWD /4WD	METER /M&A		
ENGINE	NG	UNKWN	—	UNKWN ✓	UNKWN	—	—	UNKWN	CAN COMM CIRCUIT (U1000) ✓	CAN COMM CIRCUIT (U1001) ✓
A/T	NG	UNKWN ✓	UNKWN ✓	—	UNKWN ✓	—	—	UNKWN ✓	CAN COMM CIRCUIT (U1000) ✓	—
ABS	NG	UNKWN	UNKWN	UNKWN ✓	—	UNKWN	UNKWN	—	CAN COMM CIRCUIT (U1000) ✓	—
ALL MODE AWD/4WD	NG	UNKWN	UNKWN	—	UNKWN	—	—	UNKWN	CAN COMM CIRCUIT (U1000)	—

PKIC3774E

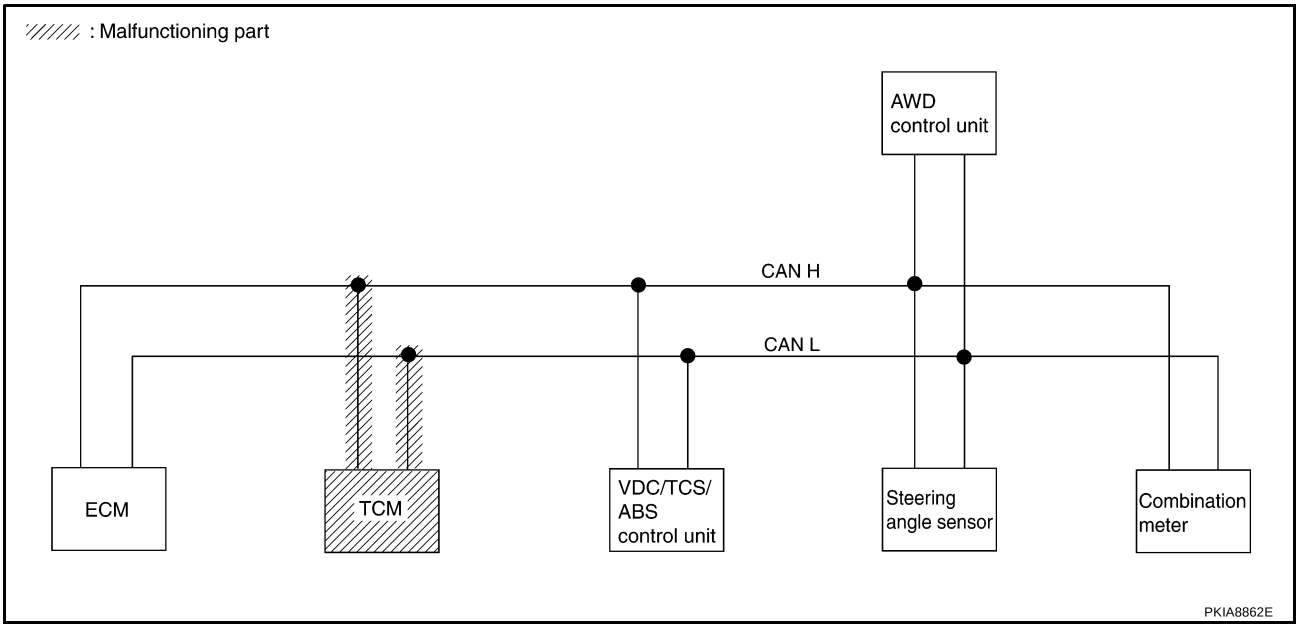

Case 5

Check VDC/TCS/ABS control unit circuit. Refer to LAN-76, "VDC/TCS/ABS Control Unit Circuit Inspection" .

SELECT SYSTEM screen	CAN DIAG SUPPORT MNTR								SELF-DIAG RESULTS	
	Initial diagnosis	Transmit diagnosis	Receive diagnosis							
			ECM	TCM	VDC/TCS /ABS	STRG	AWD /4WD	METER /M&A		
ENGINE	NG	UNKWN	–	UNKWN	UNKWN ✓	–	–	UNKWN	CAN COMM CIRCUIT (U1000)	CAN COMM CIRCUIT (U1001) ✓
A/T	NG	UNKWN	UNKWN	–	UNKWN ✓	–	–	UNKWN	CAN COMM CIRCUIT (U1000) ✓	–
ABS	NG ✓	UNKWN ✓	UNKWN ✓	UNKWN ✓	–	UNKWN ✓	UNKWN ✓	–	CAN COMM CIRCUIT (U1000) ✓	–
ALL MODE AWD/4WD	NG	UNKWN	UNKWN	–	UNKWN ✓	–	–	UNKWN	CAN COMM CIRCUIT (U1000) ✓	–

PKIC3775E

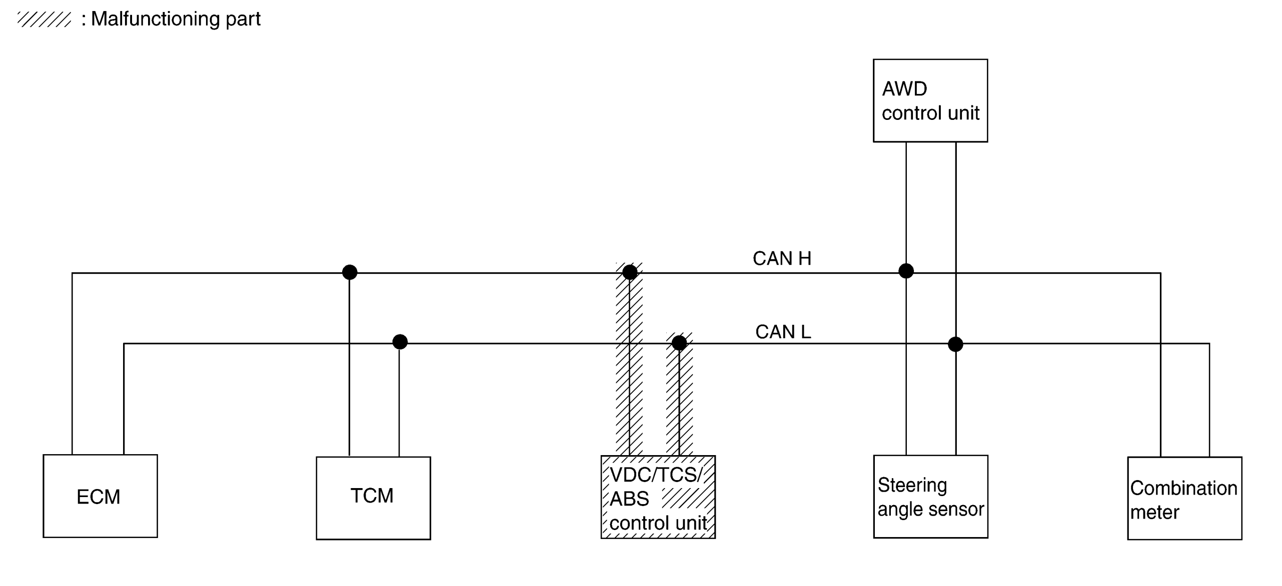

PKIA8863E

Case 6

Check steering angle sensor circuit. Refer to LAN-76, "Steering Angle Sensor Circuit Inspection" .

SELECT SYSTEM screen	CAN DIAG SUPPORT MNTR									SELF-DIAG RESULTS	
	Initial diagnosis	Transmit diagnosis	Receive diagnosis								
			ECM	TCM	VDC/TCS /ABS	STRG	AWD /4WD	METER /M&A		
ENGINE	NG	UNKWN	—	UNKWN	UNKWN	—	—	UNKWN	CAN COMM CIRCUIT (U1000)	CAN COMM CIRCUIT (U1001)
A/T	NG	UNKWN	UNKWN	—	UNKWN	—	—	UNKWN	CAN COMM CIRCUIT (U1000)	—
ABS	NG	UNKWN	UNKWN	UNKWN	—	UNKWN ✓	UNKWN	—	CAN COMM CIRCUIT (U1000) ✓	—
ALL MODE AWD/4WD	NG	UNKWN	UNKWN	—	UNKWN	—	—	UNKWN	CAN COMM CIRCUIT (U1000)	—

PKIC3776E

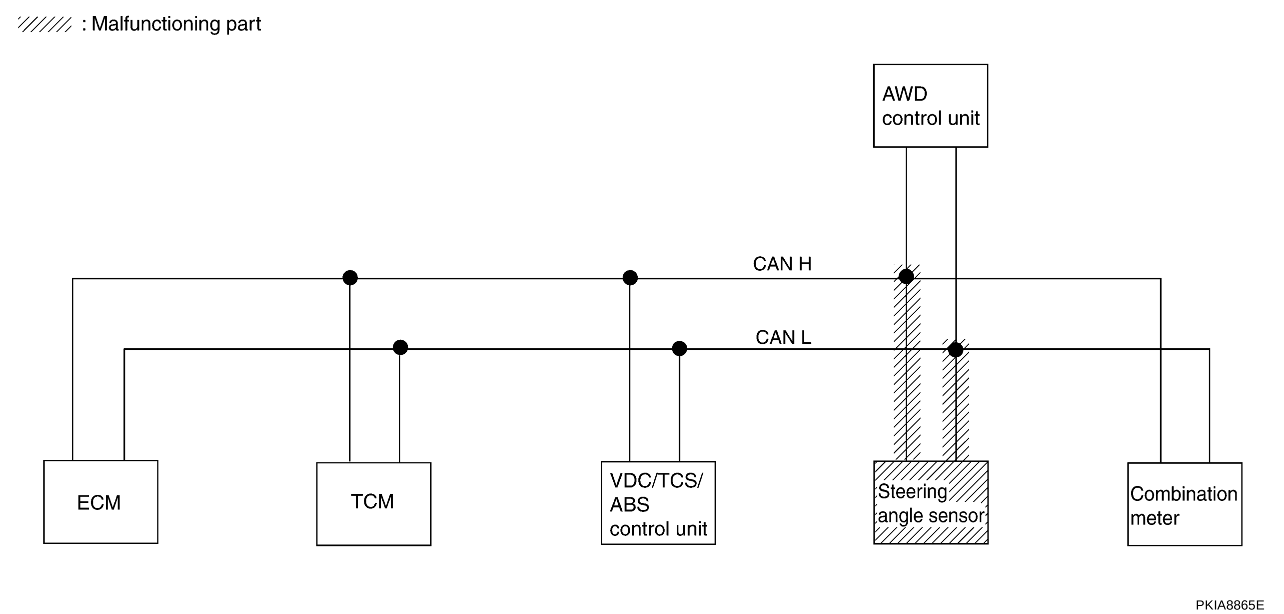

PKIA8865E

Case 7

Check AWD control unit circuit. Refer to LAN-77, "AWD Control Unit Circuit Inspection" .

SELECT SYSTEM screen	CAN DIAG SUPPORT MNTR								SELF-DIAG RESULTS	
	Initial diagnosis	Transmit diagnosis	Receive diagnosis							
			ECM	TCM	VDC/TCS /ABS	STRG	AWD /4WD	METER /M&A		
ENGINE	NG	UNKWN	–	UNKWN	UNKWN	–	–	UNKWN	CAN COMM CIRCUIT (U1000)	CAN COMM CIRCUIT (U1001)
A/T	NG	UNKWN	UNKWN	–	UNKWN	–	–	UNKWN	CAN COMM CIRCUIT (U1000)	–
ABS	NG	UNKWN	UNKWN	UNKWN	–	UNKWN	UNKWN ✓	–	CAN COMM CIRCUIT (U1000) ✓	–
ALL MODE AWD/4WD	NG	UNKWN ✓	–	–	–	–	–	–	CAN COMM CIRCUIT (U1000) ✓	–

PKIC3777E

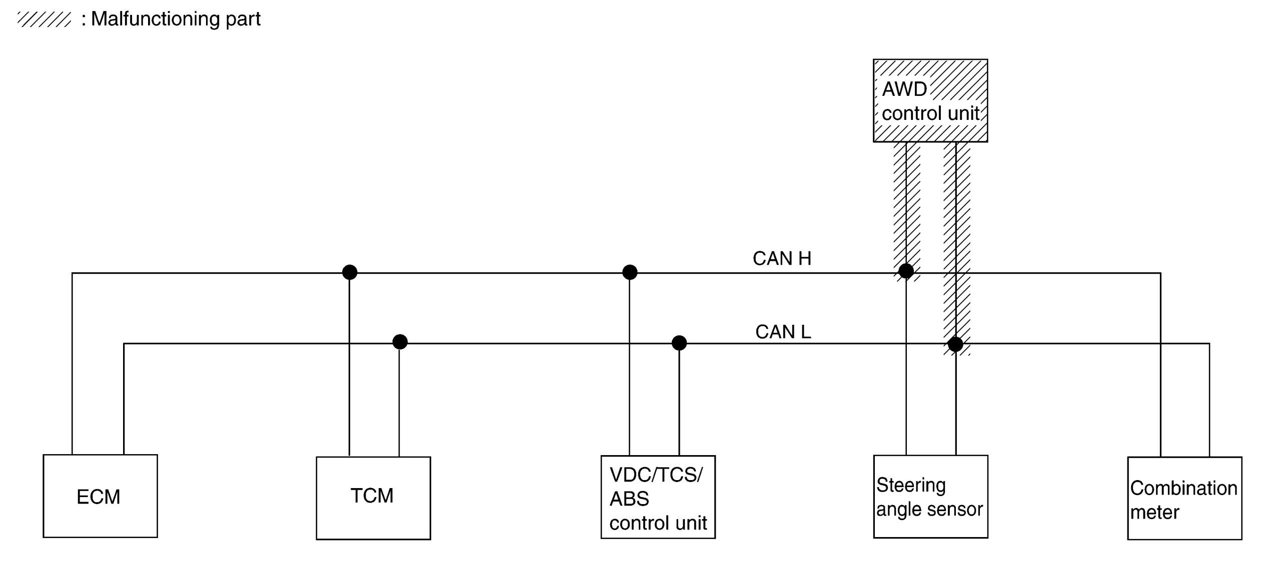

PKIA8864E

Case 8

Check combination meter circuit. Refer to LAN-78, "Combination Meter Circuit Inspection for AWD Model" .

SELECT SYSTEM screen	CAN DIAG SUPPORT MNTR								SELF-DIAG RESULTS	
	Initial diagnosis	Transmit diagnosis	Receive diagnosis							
			ECM	TCM	VDC/TCS /ABS	STRG	AWD /4WD	METER /M&A		
ENGINE	NG	UNKWN	—	UNKWN	UNKWN	—	—	UNKWN ✓	CAN COMM CIRCUIT (U1000)	CAN COMM CIRCUIT (U1001) ✓
A/T	NG	UNKWN	UNKWN	—	UNKWN	—	—	UNKWN ✓	CAN COMM CIRCUIT (U1000) ✓	—
ABS	NG	UNKWN	UNKWN	UNKWN	—	UNKWN	UNKWN	—	CAN COMM CIRCUIT (U1000)	—
ALL MODE AWD/4WD	NG	UNKWN	UNKWN	—	UNKWN	—	—	UNKWN ✓	CAN COMM CIRCUIT (U1000) ✓	—

PKIC3778E

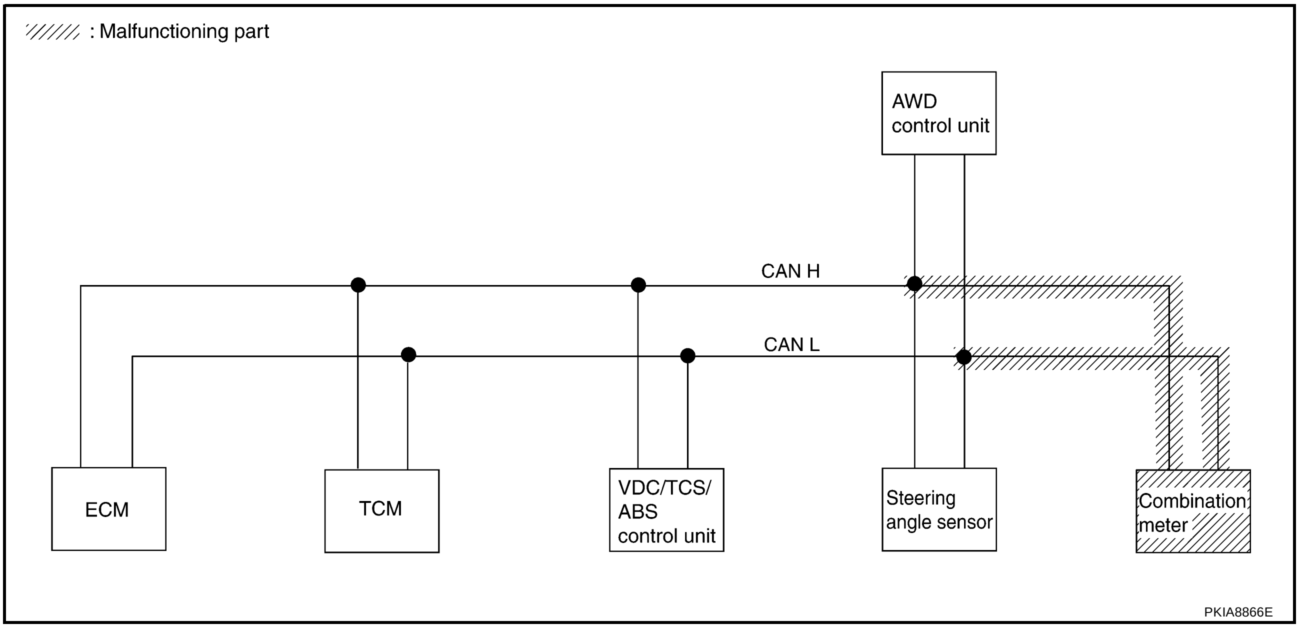

Case 9

Check CAN communication circuit. Refer to LAN-79, "CAN Communication Circuit Inspection" .

SELECT SYSTEM screen	CAN DIAG SUPPORT MNTR								SELF-DIAG RESULTS	
	Initial diagnosis	Transmit diagnosis	Receive diagnosis							
			ECM	TCM	VDC/TCS /ABS	STRG	AWD /4WD	METER /M&A		
ENGINE	NG	UNKWN	—	UNKWN ✓	UNKWN ✓	—	—	UNKWN ✓	CAN COMM CIRCUIT (U1000) ✓	CAN COMM CIRCUIT (U1001) ✓
A/T	NG	UNKWN ✓	UNKWN ✓	—	UNKWN ✓	—	—	UNKWN ✓	CAN COMM CIRCUIT (U1000) ✓	—
ABS	NG ✓	UNKWN ✓	UNKWN ✓	UNKWN ✓	—	UNKWN ✓	UNKWN ✓	—	CAN COMM CIRCUIT (U1000) ✓	—
ALL MODE AWD/4WD	NG	UNKWN ✓	—	—	—	—	—	—	CAN COMM CIRCUIT (U1000) ✓	—

PKIC3779E

TROUBLE DIAGNOSIS FOR SYSTEM

PFP:00000

Inspection Between TCM and ABS Actuator and Electric Unit (Control Unit) Circuit for 2WD Model

AKS00BK5

1. CHECK CONNECTOR

1. Turn ignition switch OFF.
2. Disconnect battery cable from the negative terminal.
3. Check following terminals and connectors for damage, bend and loose connection (connector side and harness side).
   - Harness connector F41
   - Harness connector M61
   - Harness connector M94
   - Harness connector E125

OK or NG

OK >> GO TO 2.
NG >> Repair terminal or connector.

2. CHECK HARNESS FOR OPEN CIRCUIT

1. Disconnect TCM connector and harness connector F41.
2. Check continuity between TCM harness connector and harness connector.

TCM connector		Harness connector		Continuity
Connector	Terminal	Connector	Terminal	
F46	5	F41	21	Yes
	6		8	Yes

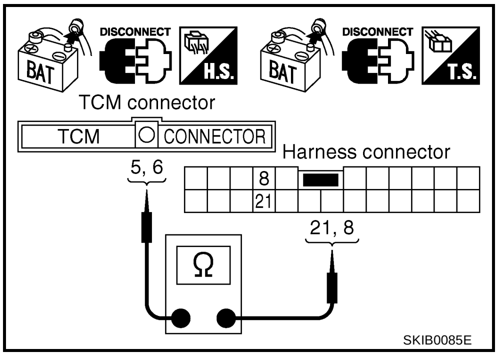

OK or NG

OK >> GO TO 3.
NG >> Repair harness.

3. CHECK HARNESS FOR OPEN CIRCUIT

1. Disconnect harness connector M94.
2. Check continuity between harness connector and harness connector.

Harness connector		Harness connector		Continuity
Connector	Terminal	Connector	Terminal	
M61	21	M94	5	Yes
	8		4	Yes

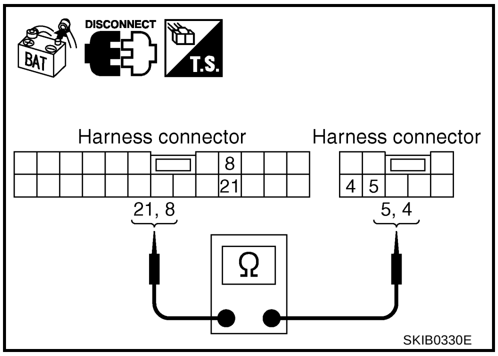

OK or NG

OK >> GO TO 4.
NG >> Repair harness.

4. CHECK HARNESS FOR OPEN CIRCUIT

1. Disconnect ABS actuator and electric unit (control unit) connector.
2. Check continuity between harness connector and ABS actuator and electric unit (control unit) harness connector.

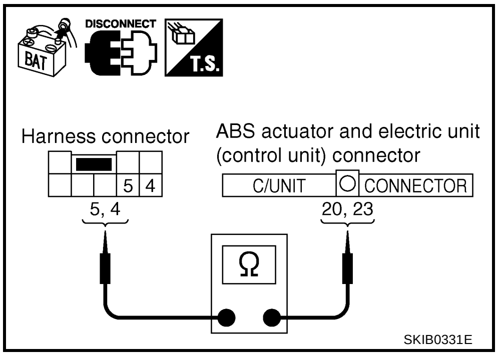

Harness connector		ABS actuator and electric unit (control unit) connector		Continuity
Connector	Terminal	Connector	Terminal	
E125	5	E69	20	Yes
	4		23	Yes

OK or NG

OK >> Connect all the connectors and diagnose again. Refer to LAN-4, "TROUBLE DIAGNOSES WORK FLOW" .
NG >> Repair harness.

Inspection Between TCM and ABS Actuator and Electric Unit (Control Unit) Circuit for AWD Model

AKS00BKR

1. CHECK CONNECTOR

1. Turn ignition switch OFF.
2. Disconnect battery cable from the negative terminal.
3. Check following terminals and connectors for damage, bend and loose connection (connector side and harness side).
- Harness connector F41
- Harness connector M61
- Harness connector M75
- Harness connector E116

OK or NG

OK >> GO TO 2.
NG >> Repair terminal or connector.

2. CHECK HARNESS FOR OPEN CIRCUIT

1. Disconnect TCM connector and harness connector F41.
2. Check continuity between TCM harness connector and harness connector.

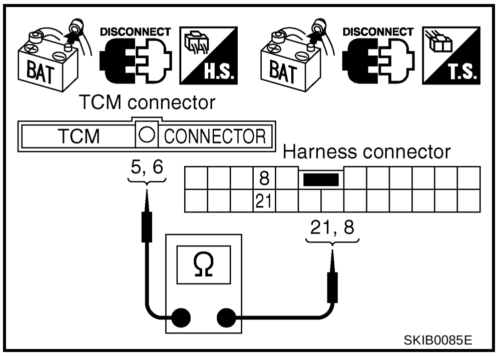

TCM connector		Harness connector		Continuity
Connector	Terminal	Connector	Terminal	
F46	5	F41	21	Yes
	6		8	Yes

OK or NG

OK >> GO TO 3.
NG >> Repair harness.

3. CHECK HARNESS FOR OPEN CIRCUIT

1. Disconnect harness connector M75.
2. Check continuity between harness connector and harness connector.

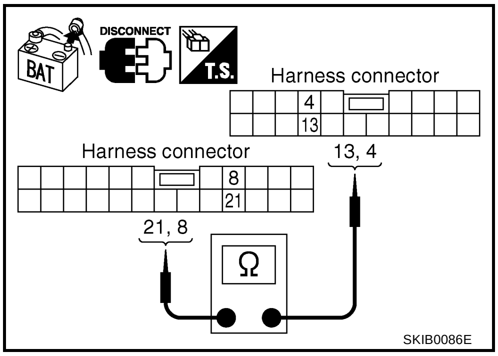

Harness connector		Harness connector		Continuity
Connector	Terminal	Connector	Terminal	
M61	21	M75	13	Yes
	8		4	Yes

OK or NG

OK >> GO TO 4.
NG >> Repair harness.

4. CHECK HARNESS FOR OPEN CIRCUIT

1. Disconnect ABS actuator and electric unit (control unit) connector.
2. Check continuity between harness connector and ABS actuator and electric unit (control unit) harness connector.

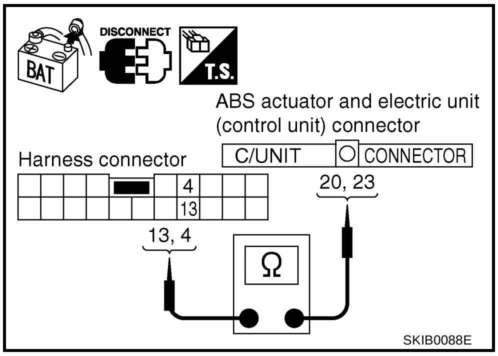

Harness connector		ABS actuator and electric unit (control unit) connector		Continuity
Connector	Terminal	Connector	Terminal	
E116	13	E69	20	Yes
	4		23	Yes

OK or NG

OK >> Connect all the connectors and diagnose again. Refer to LAN-4, "TROUBLE DIAGNOSES WORK FLOW" .
NG >> Repair harness.

Inspection Between TCM and VDC/TCS/ABS Control Unit Circuit

AKS00BLG

1. CHECK CONNECTOR

1. Turn ignition switch OFF.
2. Disconnect battery cable from the negative terminal.
3. Check following terminals and connector for damage, bend and loose connection (connector side and harness side).
   - Harness connector F41
   - Harness connector M61
   - Harness connector M75
   - Harness connector E116

OK or NG

OK >> GO TO 2.
NG >> Repair terminal or connector.

2. CHECK HARNESS FOR OPEN CIRCUIT

1. Disconnect TCM connector and harness connector F41.
2. Check continuity between TCM harness connector and harness connector.

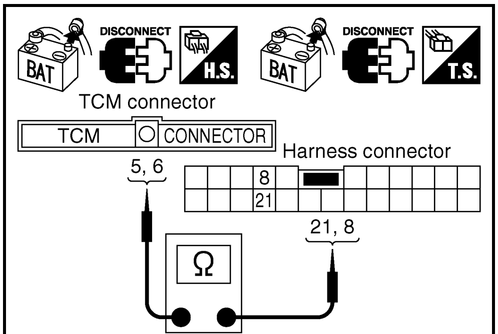

SKIB0085E

TCM connector		Harness connector		Continuity
Connector	Terminal	Connector	Terminal	
F46	5	F41	21	Yes
	6		8	Yes

OK or NG

OK >> GO TO 3.

NG >> Repair harness.

3. CHECK HARNESS FOR OPEN CIRCUIT

1. Disconnect harness connector M75.
2. Check continuity between harness connector and harness connector.

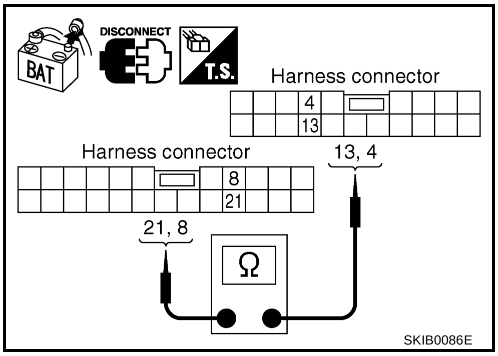

SKIB0086E

Harness connector		Harness connector		Continuity
Connector	Terminal	Connector	Terminal	
M61	21	M75	13	Yes
	8		4	Yes

OK or NG

OK >> GO TO 4.

NG >> Repair harness.

4. CHECK HARNESS FOR OPEN CIRCUIT

1. Disconnect VDC/TCS/ABS control unit connector.
2. Check continuity between harness connector and VDC/TCS/ABS control unit harness connector.

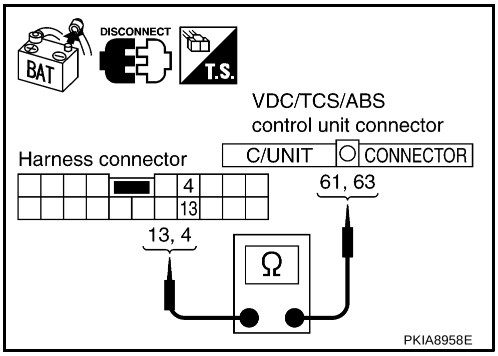

PKIA8958E

Harness connector		VDC/TCS/ABS control unit connector		Continuity
Connector	Terminal	Connector	Terminal	
E116	13	E122	61	Yes
	4		63	Yes

OK or NG

OK >> Connect all the connectors and diagnose again. Refer to LAN-4, "TROUBLE DIAGNOSES WORK FLOW" .

NG >> Repair harness.

Inspection Between ABS Actuator and Electric Unit (Control Unit) and AWD Control Unit Circuit

AKS00BKG

1. CHECK CONNECTOR

1. Turn ignition switch OFF.
2. Disconnect battery cable from the negative terminal.
3. Check following terminals and connectors for damage, bend and loose connection (connector side and harness side).
   - Harness connector E116
   - Harness connector M75

OK or NG

OK >> GO TO 2.
NG >> Repair terminal or connector.

2. CHECK HARNESS FOR OPEN CIRCUIT

1. Disconnect ABS actuator and electric unit (control unit) connector and harness connector E116.
2. Check continuity between ABS actuator and electric unit (control unit) harness connector and harness connector.

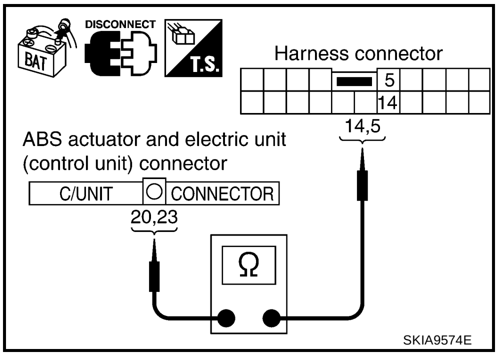

SKIA9574E

ABS actuator and electric unit (control unit) connector		Harness connector		Continuity
Connector	Terminal	Connector	Terminal	
E69	20	E116	14	Yes
	23		5	Yes

OK or NG

OK >> GO TO 3.
NG >> Repair harness.

3. CHECK HARNESS FOR OPEN CIRCUIT

1. Disconnect AWD control unit connector.
2. Check continuity between harness connector and AWD control unit harness connector.

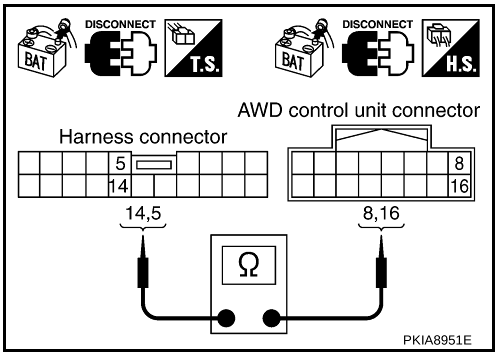

PKIA8951E

Harness connector		AWD control unit connector		Continuity
Connector	Terminal	Connector	Terminal	
M75	14	M107	8	Yes
	5		16	Yes

OK or NG

OK >> Connect all the connectors and diagnose again. Refer to LAN-4, "TROUBLE DIAGNOSES WORK FLOW" .
NG >> Repair harness.

Inspection Between VDC/TCS/ABS Control Unit and AWD Control Unit Circuit

AKS00BL4

1. CHECK CONNECTOR

1. Turn ignition switch OFF.
2. Disconnect battery cable from the negative terminal.
3. Check following terminals and connector for damage, bend and loose connection (connector side and harness side).

- Harness connector E116
- Harness connector M75

OK or NG

OK >> GO TO 2.
NG >> Repair terminal or connector.

2. CHECK HARNESS FOR OPEN CIRCUIT

1. Disconnect VDC/TCS/ABS control unit connector and harness connector E116.
2. Check continuity between VDC/TCS/ABS control unit harness connector and harness connector.

VDC/TCS/ABS control unit connector		Harness connector		Continuity
Connector	Terminal	Connector	Terminal	
E122	61	E116	14	Yes
	63		5	Yes

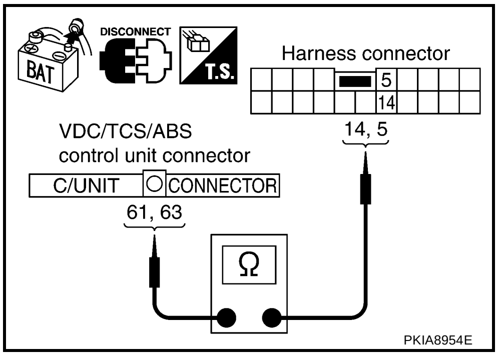

PKIA8954E

OK or NG

OK >> GO TO 3.
NG >> Repair harness.

3. CHECK HARNESS FOR OPEN CIRCUIT

1. Disconnect AWD control unit connector.
2. Check continuity between harness connector and AWD control unit harness connector.

Harness connector		AWD control unit connector		Continuity
Connector	Terminal	Connector	Terminal	
M75	14	M107	8	Yes
	5		16	Yes

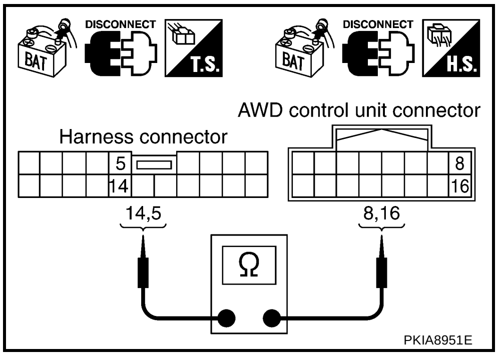

PKIA8951E

OK or NG

OK >> Connect all the connectors and diagnose again. Refer to LAN-4, "TROUBLE DIAGNOSES WORK FLOW" .
NG >> Repair harness.

ECM Circuit Inspection for A/T Model

AKS00BK6

1. CHECK CONNECTOR

1. Turn ignition switch OFF.
2. Disconnect battery cable from the negative terminal.
3. Check following terminals and connectors for damage, bend and loose connection (control module side and harness side).

- ECM connector
- Harness connector M61
- Harness connector F41

OK or NG

OK >> GO TO 2.
NG >> Repair terminal or connector.

2. CHECK HARNESS FOR OPEN CIRCUIT

1. Disconnect ECM connector.
2. Check resistance between ECM harness connector terminals.

ECM connector	Terminal		Resistance (Approx.)
M118	94	86	108 – 132 Ω

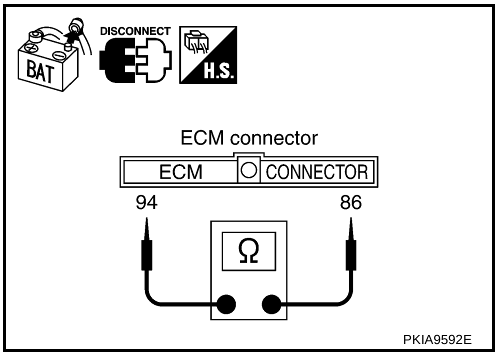

OK or NG

OK >> Replace ECM.
NG >> Repair harness between ECM and TCM.

ECM Circuit Inspection for M/T Model

AKS00BKH

1. CHECK CONNECTOR

1. Turn ignition switch OFF.
2. Disconnect battery cable from the negative terminal.
3. Check following terminals and connectors for damage, bend and loose connection (control module side and harness side).

- ECM connector
- Harness connector M75
- Harness connector E116

OK or NG

OK >> GO TO 2.
NG >> Repair terminal or connector.

2. CHECK HARNESS FOR OPEN CIRCUIT

1. Disconnect ECM connector.
2. Check resistance between ECM harness connector terminals.

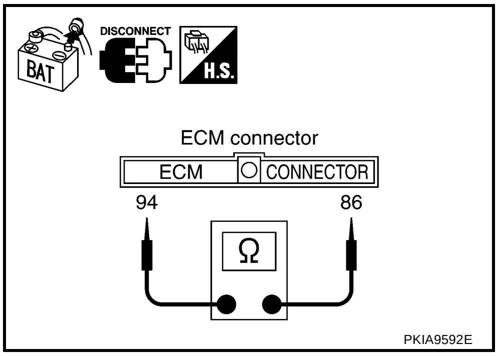

ECM connector	Terminal		Resistance (Approx.)
M118	94	86	108 – 132 Ω

OK or NG

OK >> Replace ECM.
NG >>
- Repair harness between ECM and ABS actuator and electric unit (control unit). (ABS model)
- Repair harness between ECM and VDC/TCS/ABS control unit. (VDC model)

TCM Circuit Inspection

AKS00BK7

1. CHECK CONNECTOR

1. Turn ignition switch OFF.
2. Disconnect battery cable from the negative terminal.
3. Check terminals and connector of TCM for damage, bend and loose connection (control module side and harness side).

OK or NG

OK >> GO TO 2.
NG >> Repair terminal or connector.

2. CHECK HARNESS FOR OPEN CIRCUIT

1. Disconnect TCM connector.
2. Check resistance between TCM harness connector terminals.

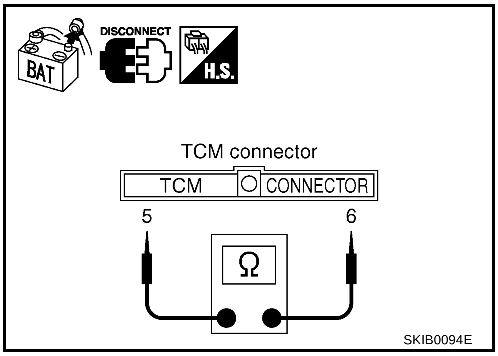

TCM connector	Terminal		Resistance (Approx.)
F46	5	6	54 – 66 Ω

OK or NG

OK >> Replace TCM.
NG >> Repair harness between TCM and harness connector F41.

ABS Actuator and Electric Unit (Control Unit) Circuit Inspection

AKS00BK8

1. CHECK CONNECTOR

1. Turn ignition switch OFF.
2. Disconnect battery cable from the negative terminal.
3. Check terminals and connector of ABS actuator and electric unit (control unit) for damage, bend and loose connection (control unit side and harness side).

OK or NG

OK >> GO TO 2.
NG >> Repair terminal or connector.

A
B
C
D
E
F
G
H
I
J
LAN
L
M

2. CHECK HARNESS FOR OPEN CIRCUIT

1. Disconnect ABS actuator and electric unit (control unit) connector.
2. Check resistance between ABS actuator and electric unit (control unit) harness connector terminals.

ABS actuator and electric unit (control unit) connector	Terminal		Resistance (Approx.)
E69	20	23	54 – 66 Ω

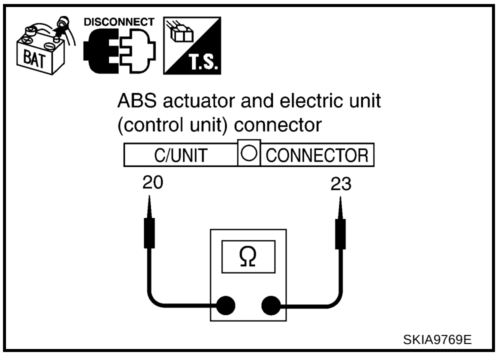

OK or NG

OK >> Replace ABS actuator and electric unit (control unit).
NG >>
- Repair harness between ABS actuator and electric unit (control unit) and harness connector E125. (2WD model)
- Repair harness between ABS actuator and electric unit (control unit) and harness connector E116. (AWD model)

VDC/TCS/ABS Control Unit Circuit Inspection

AKS00BL6

1. CHECK CONNECTOR

1. Turn ignition switch OFF.
2. Disconnect battery cable from the negative terminal.
3. Check terminals and connector of VDC/TCS/ABS control unit for damage, bend and loose connection (control unit side and harness side).

OK or NG

OK >> GO TO 2.
NG >> Repair terminal or connector.

2. CHECK HARNESS FOR OPEN CIRCUIT

1. Disconnect VDC/TCS/ABS control unit connector.
2. Check resistance between VDC/TCS/ABS control unit harness connector terminals.

VDC/TCS/ABS control unit connector	Terminal		Resistance (Approx.)
E122	61	63	54 – 66 Ω

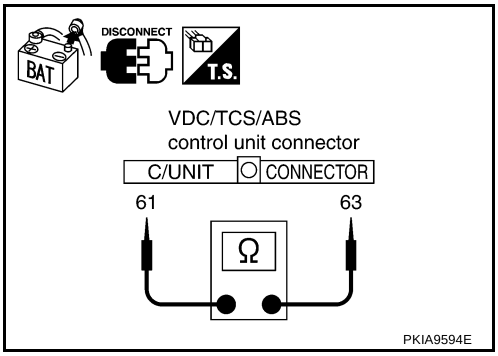

OK or NG

OK >> Replace VDC/TCS/ABS control unit.
NG >> Repair harness between VDC/TCS/ABS control unit and harness connector E116.

Steering Angle Sensor Circuit Inspection

AKS00BLL

1. CHECK CONNECTOR

1. Turn ignition switch OFF.
2. Disconnect battery cable from the negative terminal.
3. Check terminals and connector of steering angle sensor for damage, bend and loose connection (sensor side and harness side).

OK or NG

OK >> GO TO 2.
NG >> Repair terminal or connector.

2. CHECK HARNESS FOR OPEN CIRCUIT

1. Disconnect steering angle sensor connector.
2. Check resistance between steering angle sensor harness connector terminals.

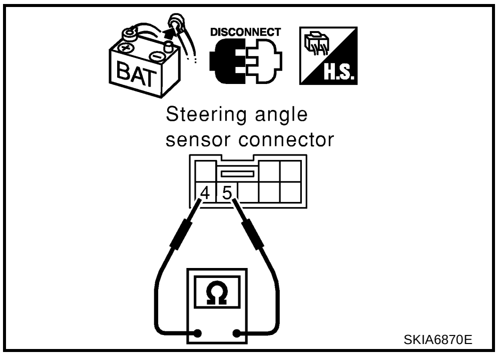

Steering angle sensor connector	Terminal		Resistance (Approx.)
M81	4	5	54 – 66 Ω

OK or NG

OK >> Replace steering angle sensor.
NG >> Repair harness between steering angle sensor and AWD control unit.

AWD Control Unit Circuit Inspection

AKS00BKJ

1. CHECK CONNECTOR

1. Turn ignition switch OFF.
2. Disconnect battery cable from the negative terminal.
3. Check terminals and connector of AWD control unit for damage, bend and loose connection (control unit side and harness side).

OK or NG

OK >> GO TO 2.
NG >> Repair terminal or connector.

2. CHECK HARNESS FOR OPEN CIRCUIT

1. Disconnect AWD control unit connector.
2. Check resistance between AWD control unit harness connector terminals.

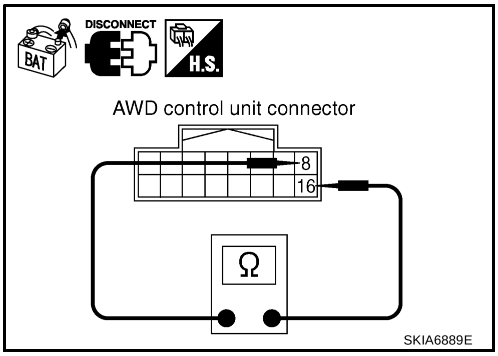

AWD control unit connector	Terminal		Resistance (Approx.)
M107	8	16	54 – 66 Ω

OK or NG

OK >> Replace AWD control unit.
NG >> Repair harness between AWD control unit and combination meter.

Combination Meter Circuit Inspection for 2WD Model

AKS00BK9

1. CHECK CONNECTOR

1. Turn ignition switch OFF.
2. Disconnect battery cable from the negative terminal.
3. Check following terminals and connectors for damage, bend and loose connection (meter side and harness side).
- Combination meter connector
- Harness connector M94
- Harness connector E125

OK or NG

OK >> GO TO 2.
NG >> Repair terminal or connector.

2. CHECK HARNESS FOR OPEN CIRCUIT

1. Disconnect combination meter connector.
2. Check resistance between combination meter harness connector terminals.

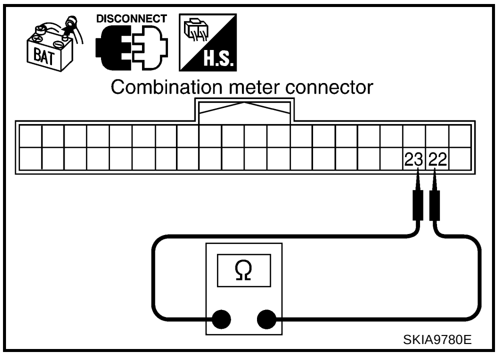

SKIA9780E

Combination meter connector	Terminal		Resistance (Approx.)
M44	22	23	108 – 132 Ω

OK or NG

OK >> Replace combination meter.
NG >> Repair harness between combination meter and ABS actuator and electric unit (control unit).

Combination Meter Circuit Inspection for AWD Model

AKS00BKK

1. CHECK CONNECTOR

1. Turn ignition switch OFF.
2. Disconnect battery cable from the negative terminal.
3. Check terminals and connector of combination meter for damage, bend and loose connection (meter side and harness side).

OK or NG

OK >> GO TO 2.
NG >> Repair terminal or connector.

2. CHECK HARNESS FOR OPEN CIRCUIT

1. Disconnect combination meter connector.
2. Check resistance between combination meter harness connector terminals.

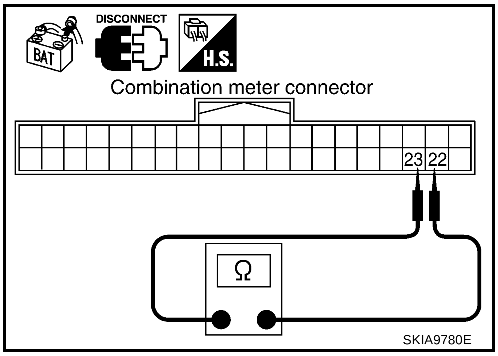

SKIA9780E

Combination meter connector	Terminal		Resistance (Approx.)
M44	22	23	108 – 132 Ω

OK or NG

OK >> Replace combination meter.
NG >> Repair harness between combination meter and AWD control unit.

CAN Communication Circuit Inspection

AKS00FCS

1. CHECK CONNECTOR

1. Turn ignition switch OFF.
2. Disconnect the battery cable from the negative terminal.
3. Disconnect the harness connector for each unit on the CAN network and check terminals for deformation, disconnection, looseness or damage.

OK or NG

OK >> GO TO 2.
NG >> Repair terminal or connector as necessary.

2. CHECK HARNESS FOR SHORT CIRCUIT

With all module and control unit connectors disconnected, check continuity between ECM harness connector terminals.

ECM connector	Terminal		Continuity
M118	94	86	No

OK or NG

OK >> GO TO 3.
NG >>
- Repair harness.
- Change harness if shielded lines are used for the harness.

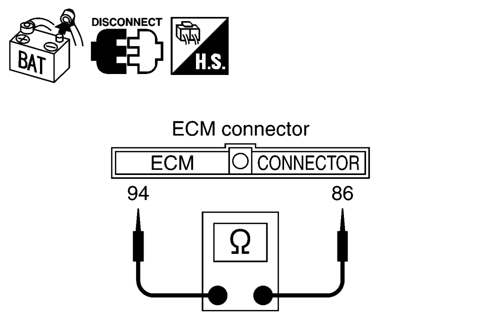

PKIA9592E

3. CHECK HARNESS FOR SHORT CIRCUIT

Check continuity between ECM harness connector and ground.

ECM connector	Terminal		Continuity
M118	94	Ground	No
	86		No

OK or NG

OK >> GO TO 4.
NG >>
- Repair harness.
- Change harness if shielded lines are used for the harness.

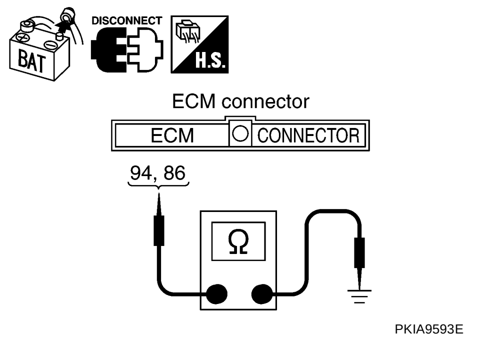

PKIA9593E

4. CHECK ECM AND COMBINATION METER INTERNAL CIRCUIT

1. Remove ECM and combination meter from vehicle.
2. Check resistance between ECM terminals.

Terminal		Resistance (Approx.)
94	86	108 – 132 Ω

3. Check resistance between combination meter terminals.

Terminal		Resistance (Approx.)
22	23	108 – 132 Ω

OK or NG

OK >> GO TO 5.
NG >> Replace ECM and/or combination meter.

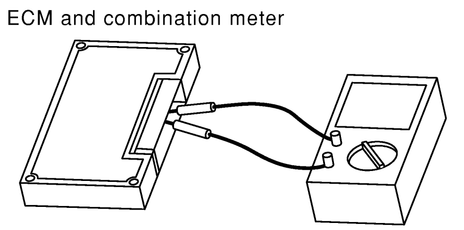

PKIA0830E

5. CHECK SYMPTOM

1. Fill in described symptoms on the column “Symptom” in the check sheet.
2. Connect all connectors, and then make sure that the symptom is reproduced.

OK or NG

OK >> GO TO 6.
NG >> Refer to LAN-11, "Example of Filling in Check Sheet When Initial Conditions Are Not Reproduced".

6. UNIT REPRODUCIBILITY INSPECTION

Perform the following procedure for each unit on the CAN network, and then perform reproducibility test.

1. Turn ignition switch OFF.
2. Disconnect the battery cable from the negative terminal.
3. Disconnect the unit connector.
4. Connect the battery cable to the negative terminal.
5. Make sure that the symptom filled in the “Symptom” of the check sheet is reproduced. (Do not confuse it with the symptom related to removed unit.)
6. Make sure that the same symptom is reproduced.

Inspection results

Reproduced>>Install removed unit, and then check the other unit.
Not reproduced>>Replace removed unit.